MCV Evaluation Platform (EVP)

Table of Content

Revision History

Revision	Date	Changes
1.0	2016-09-20	Initial release, based on MCVEVK V3.1
1.1	2017-04-11	BOM corrections (R42, R47, R49, mechanical parts)
2.0	2018-05-24	Display connector, second 1G Eth, Pmod (3.3V only)

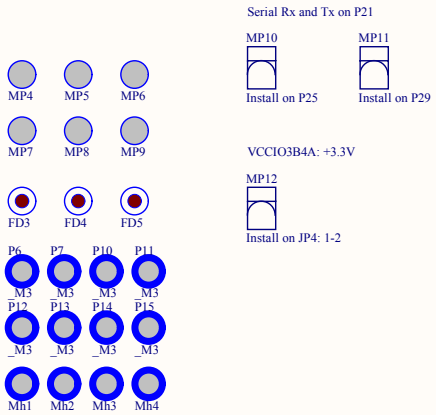

Variant: [No Variations]
Comment: VariantComment
Number:
Revision:
Sheet1 of 9
Date: 24.05.2018 Time: 16:15:25
File: First_Sheet.SCHDOC

aries embedded GmbH
Schöngeisinger Straße 84
D-82256 Fürstenfeldbruck
Tel. +49 (0)8141 36367-0
web: www.aries-embedded.de

MCV module connectors

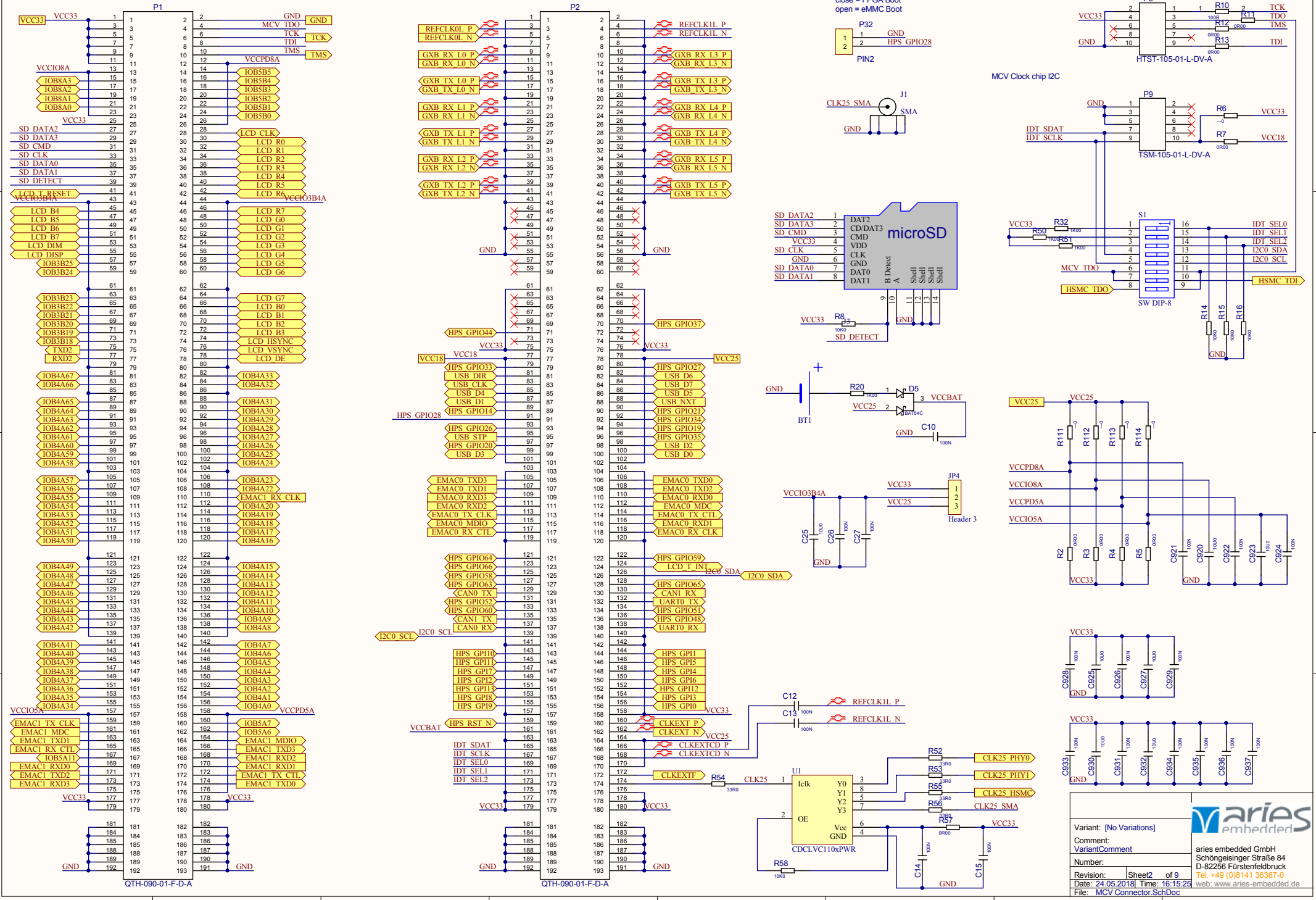

UART (RS-232)

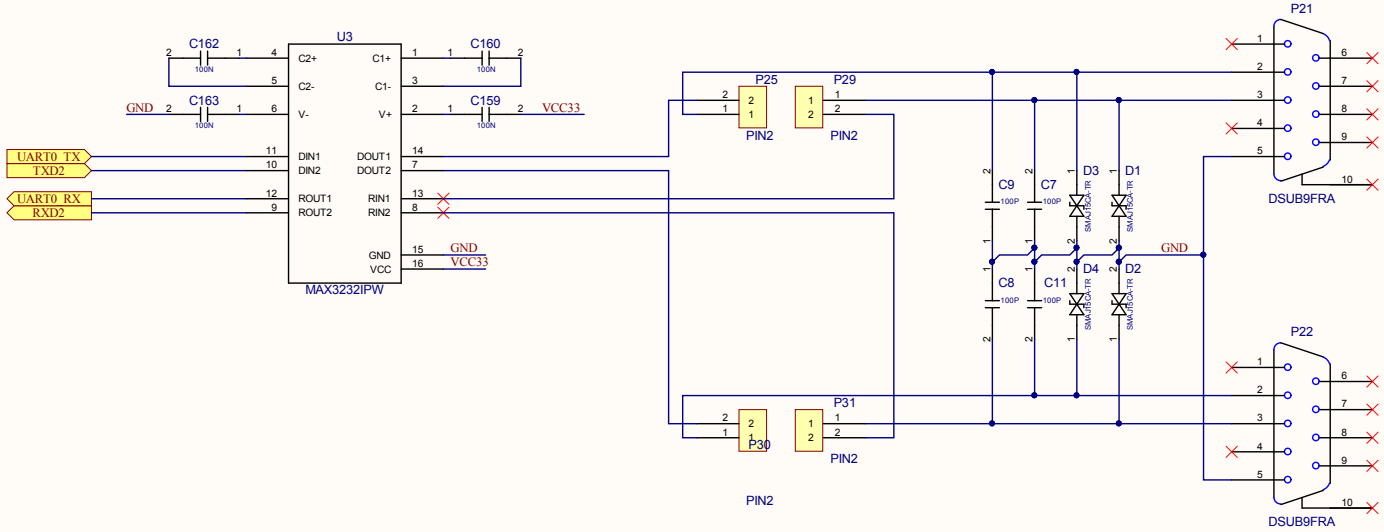

CAN-bus

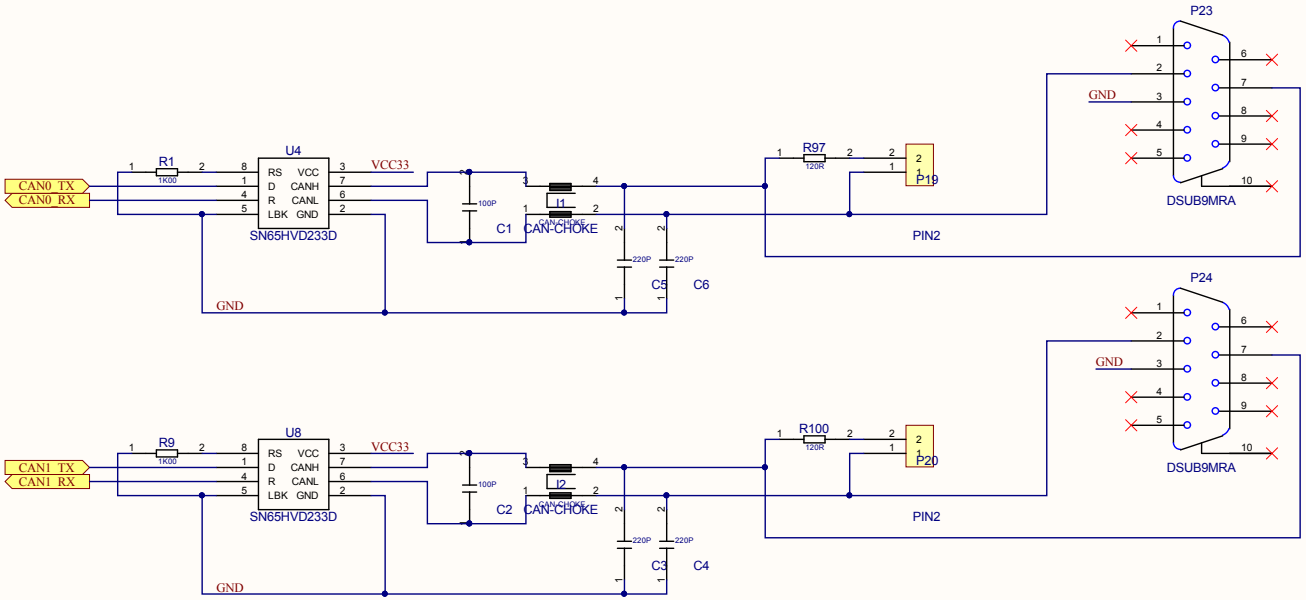

VCC33 — VCC33

GND — GND

Variant: [No Variations]	
Comment: VariantComment	
Number:	
Revision:	Sheet3 of 9
Date: 24.05.2018	Time: 16:15:25
File: UART.SCHDOC	

aries embedded GmbH
Schöngeisinger Straße 84
D-82256 Fürstenfeldbruck
Tel. +49 (0)8141 36367-0
web: www.aries-embedded.de

HPS - USB Interface

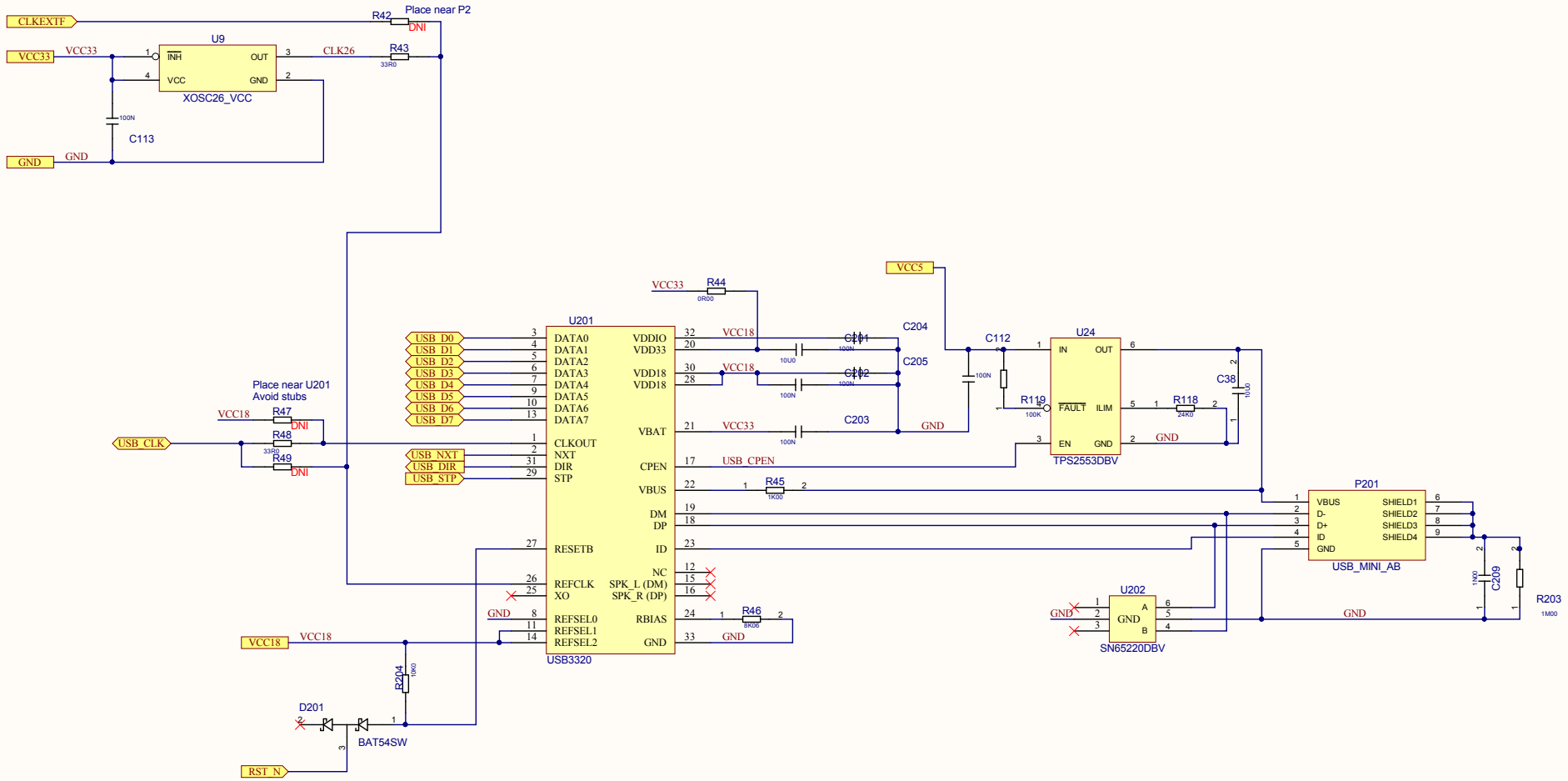

Variant: [No Variations]
Comment: VariantComment
Number:
Revision:
Sheet4 of 9
Date: 24.05.2018 Time: 16:15:25
File: usb.SCHDOC

aries embedded GmbH
Schöngeisinger Straße 84
D-82256 Fürstenfeldbruck
Tel. +49 (0)8141 36367-0
web: www.aries-embedded.de

HPS Gigabit Ethernet Phy 0

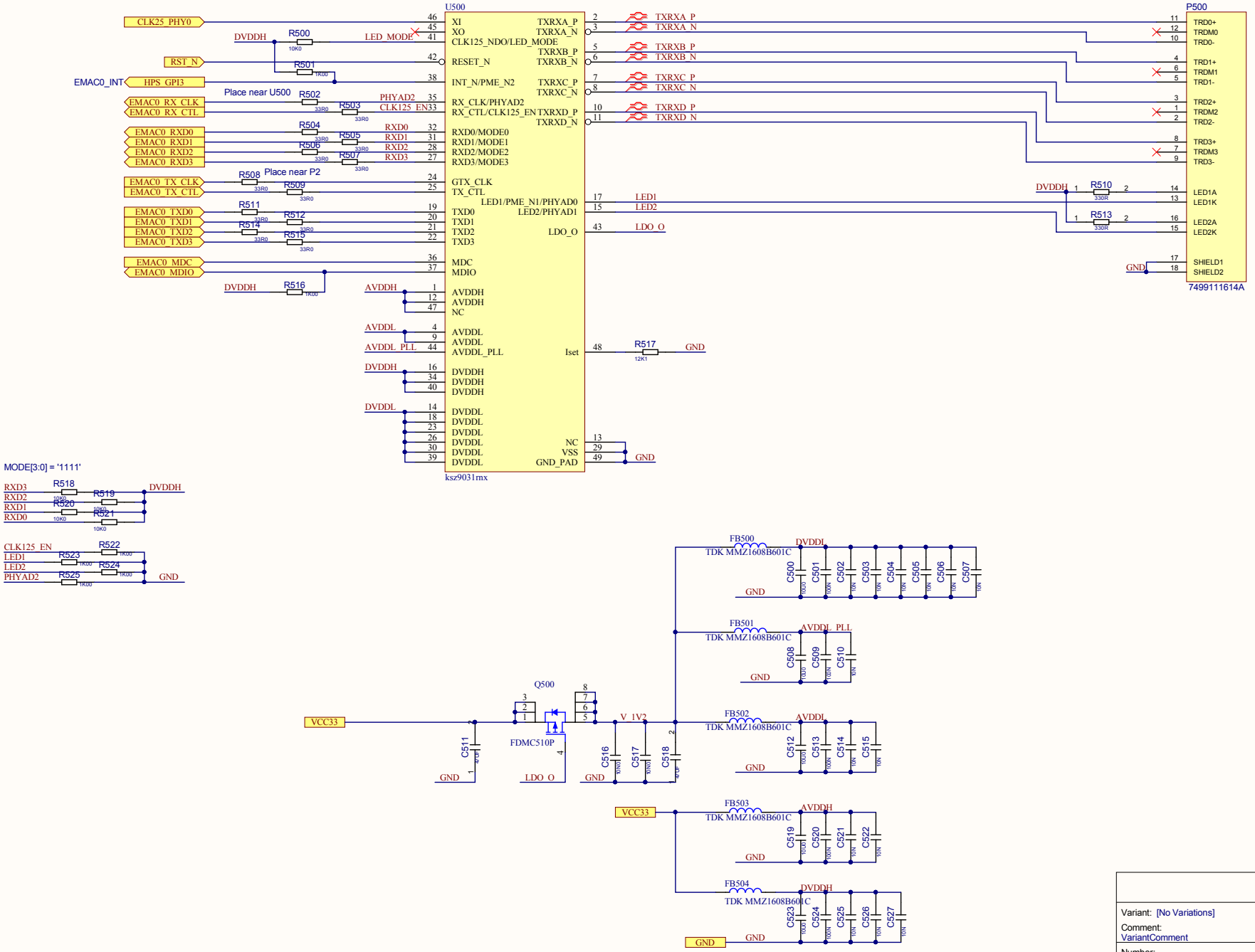

Variant: [No Variations]
Comment: VariantComment
Number:
Revision:
Sheet5 of 9
Date: 24.05.2018 Time: 16:15:25
File: Ethernet PHY0.SchDoc

aries embedded GmbH
Schöngeisinger Straße 84
D-82256 Fürstenfeldbruck
Tel. +49 (0)8141 36367-0
web: www.aries-embedded.de

HPS Gigabit Ethernet Phy 1

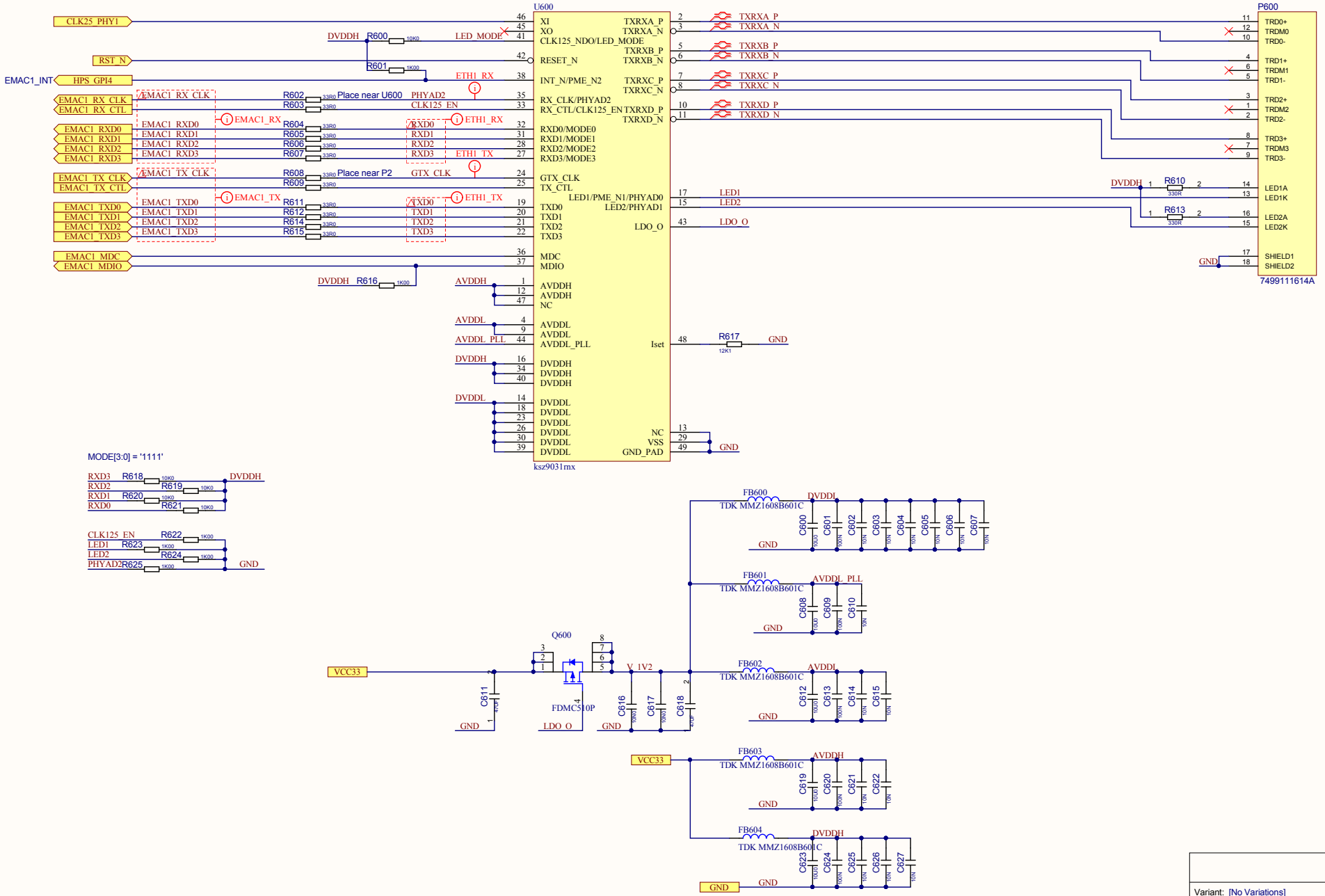

Variant: [No Variations]

Comment: VariantComment

Number:

Revision: Sheet6 of 9

Date: 24.05.2018 Time: 16:15:25

File: Ethernet PHY1.SchDoc

aries embedded GmbH
Schöngeisinger Straße 84
D-82256 Fürstenfeldbruck
Tel. +49 (0)8141 36367-0
web: www.aries-embedded.de

TFT Interface and Touch Controller

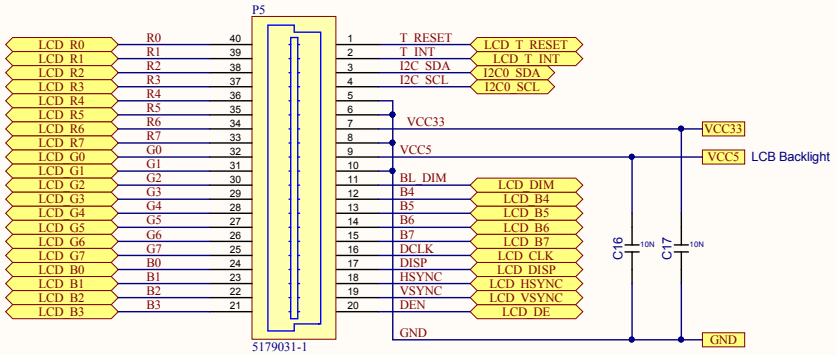

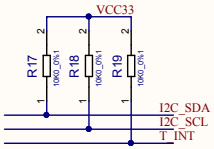

Variant: [No Variations]

Comment: VariantComment

Number:

Revision: Sheet7 of 9

Date: 24.05.2018 Time: 16:15:25

File: LCD.SchDoc

aries embedded GmbH
Schöngeisinger Straße 84
D-82256 Fürstenfeldbruck
Tel. +49 (0)8141 36367-0
web: www.aries-embedded.de

Extension Connectors

Pmod

Peripheral Modules

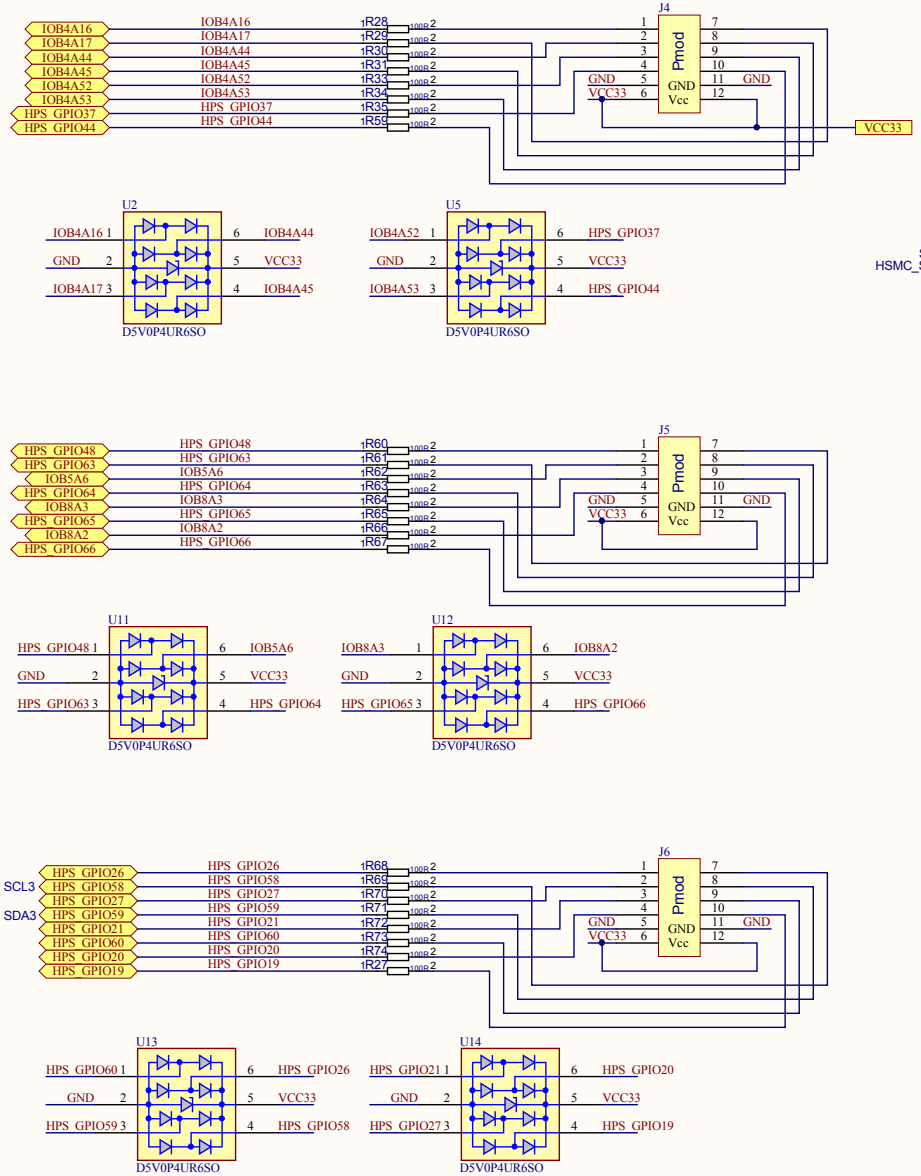

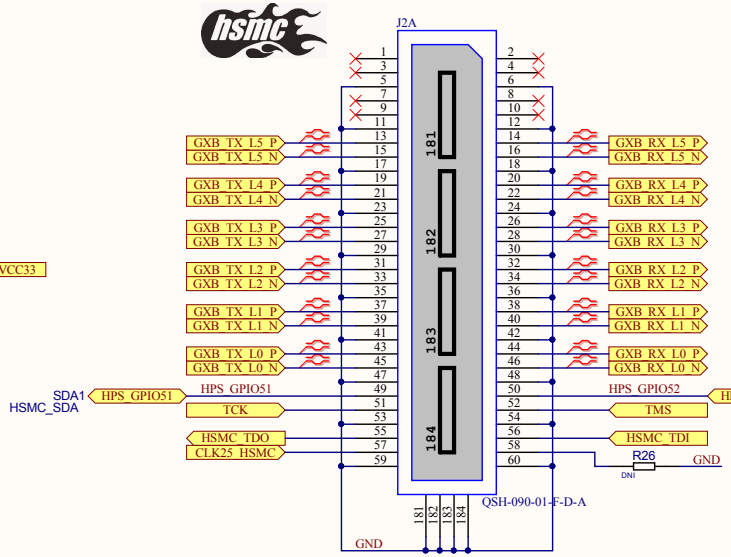

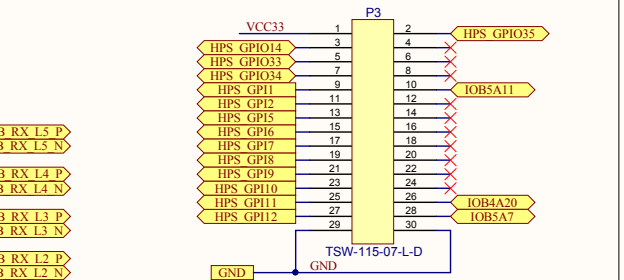

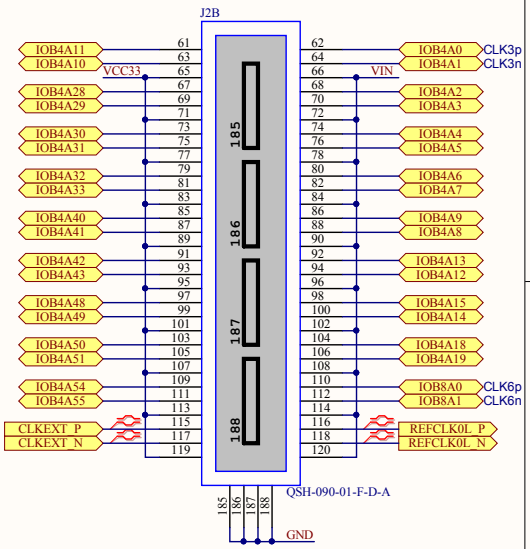

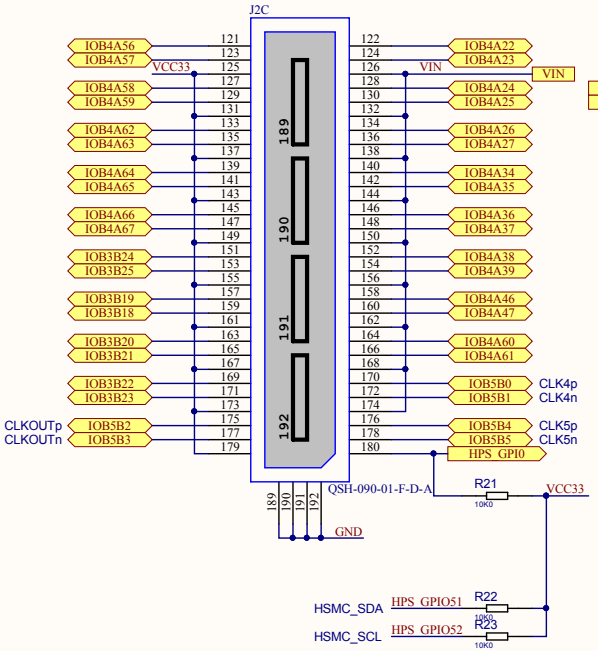

Variant: [No Variations]

Comment: VariantComment

Number:

Revision: Sheet8 of 9

Date: 24.05.2018 Time: 16:15:25

File: Extensions.SchDoc

aries embedded GmbH
Schöngeisinger Straße 84
D-82256 Fürstenfeldbruck
Tel. +49 (0)8141 36367-0
web: www.aries-embedded.de

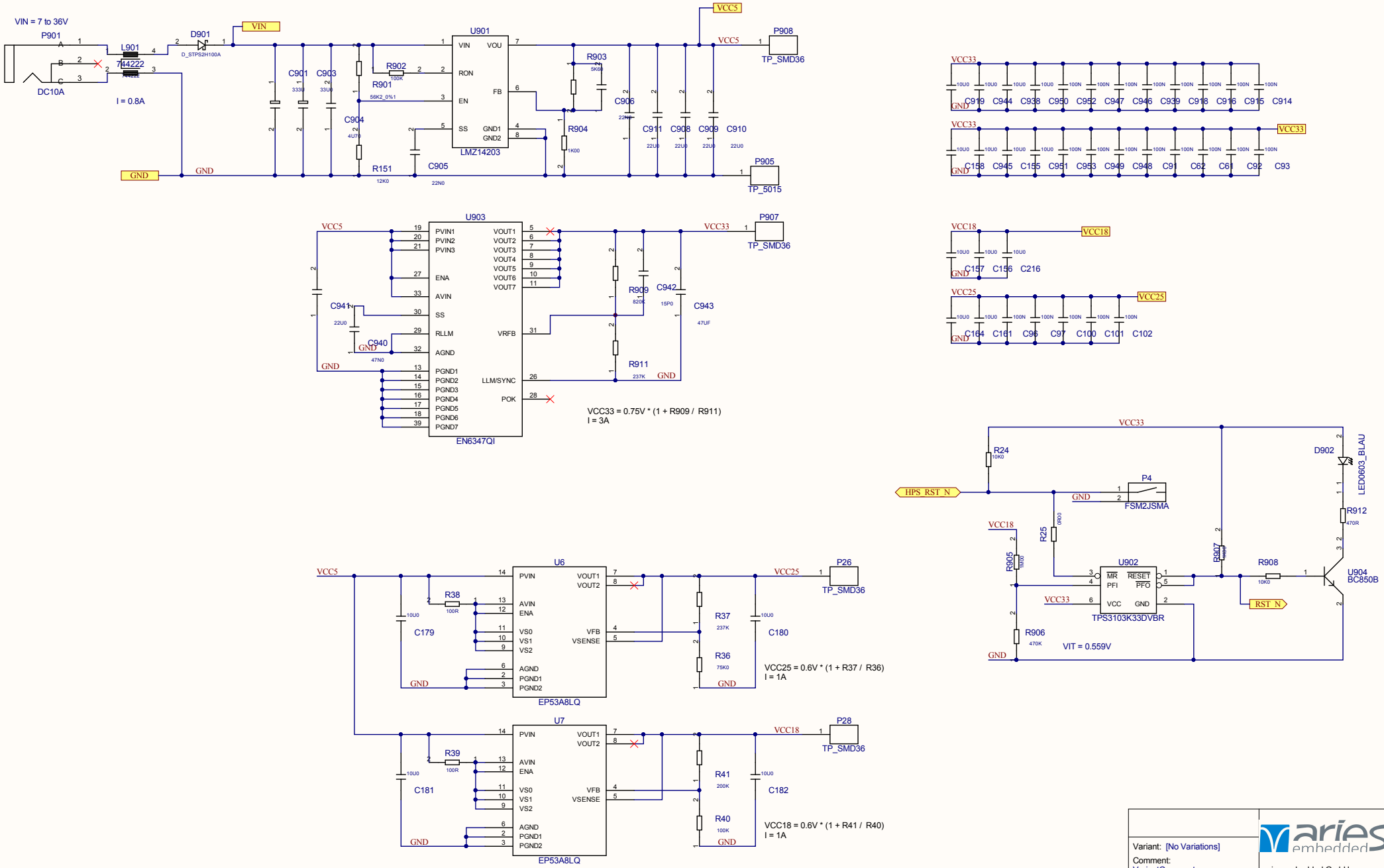

Variant: [No Variations]
Comment: VariantComment
Number:
Revision:
Sheet9 of 9
Date: 24.05.2018 Time: 16:15:26
File: power.SCHDOC

aries embedded GmbH
Schöngeisinger Straße 84
D-82256 Fürstenfeldbruck
Tel. +49 (0)8141 36367-0
web: www.aries-embedded.de

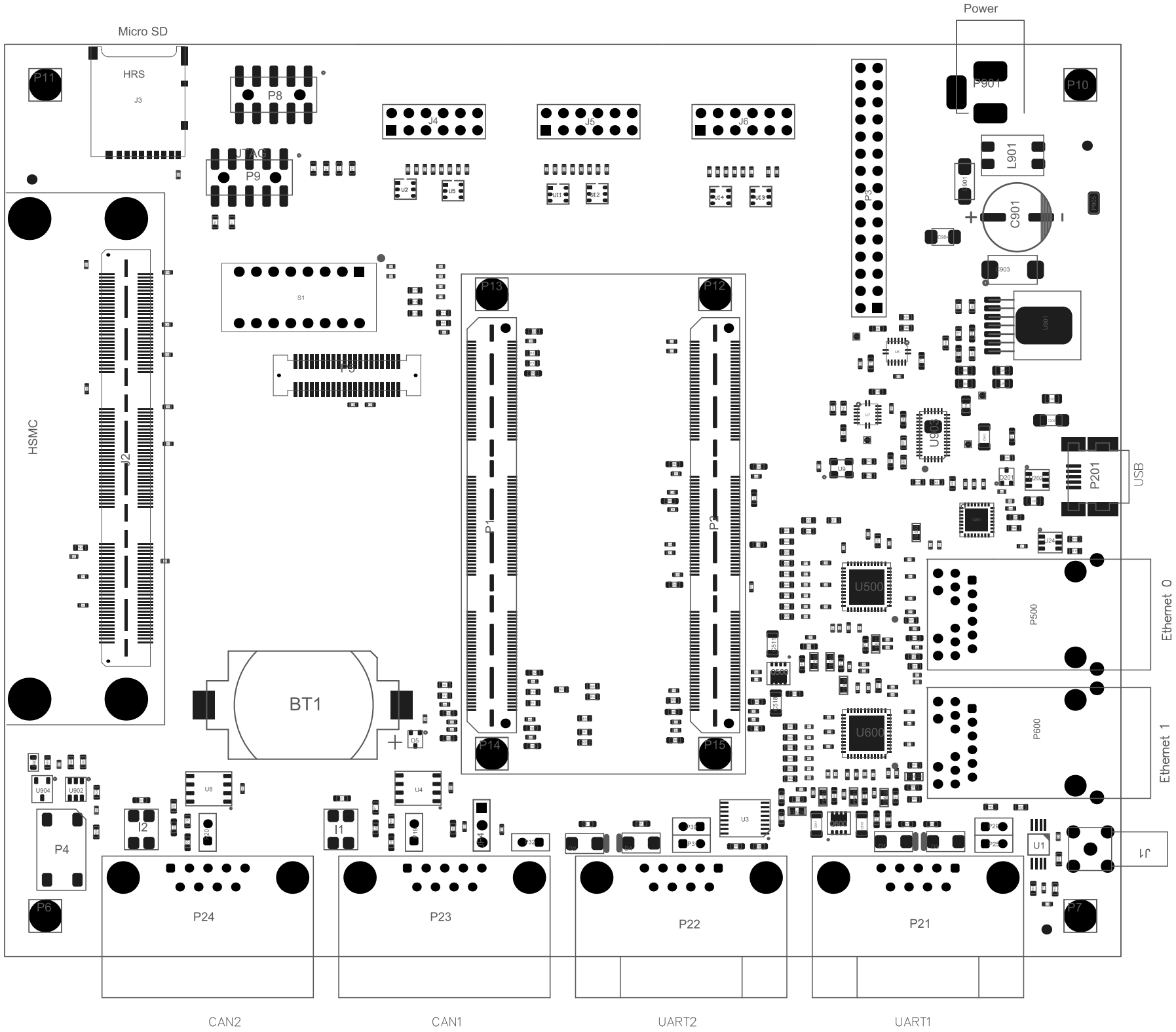
Micro SD
HRS
J3
P11
P8
JTAG
P9
J4
J5
J6
Power
P901
P10
L901
C901
S1
P13
P12
P1
P2
HSMC
J2
BT1
P14
P15
U500
U600
P500
P600
Ethernet 0
Ethernet 1
P201
USB
J1
U1
P4
P6
P7
P24
P23
P22
P21
CAN2
CAN1
UART2
UART1

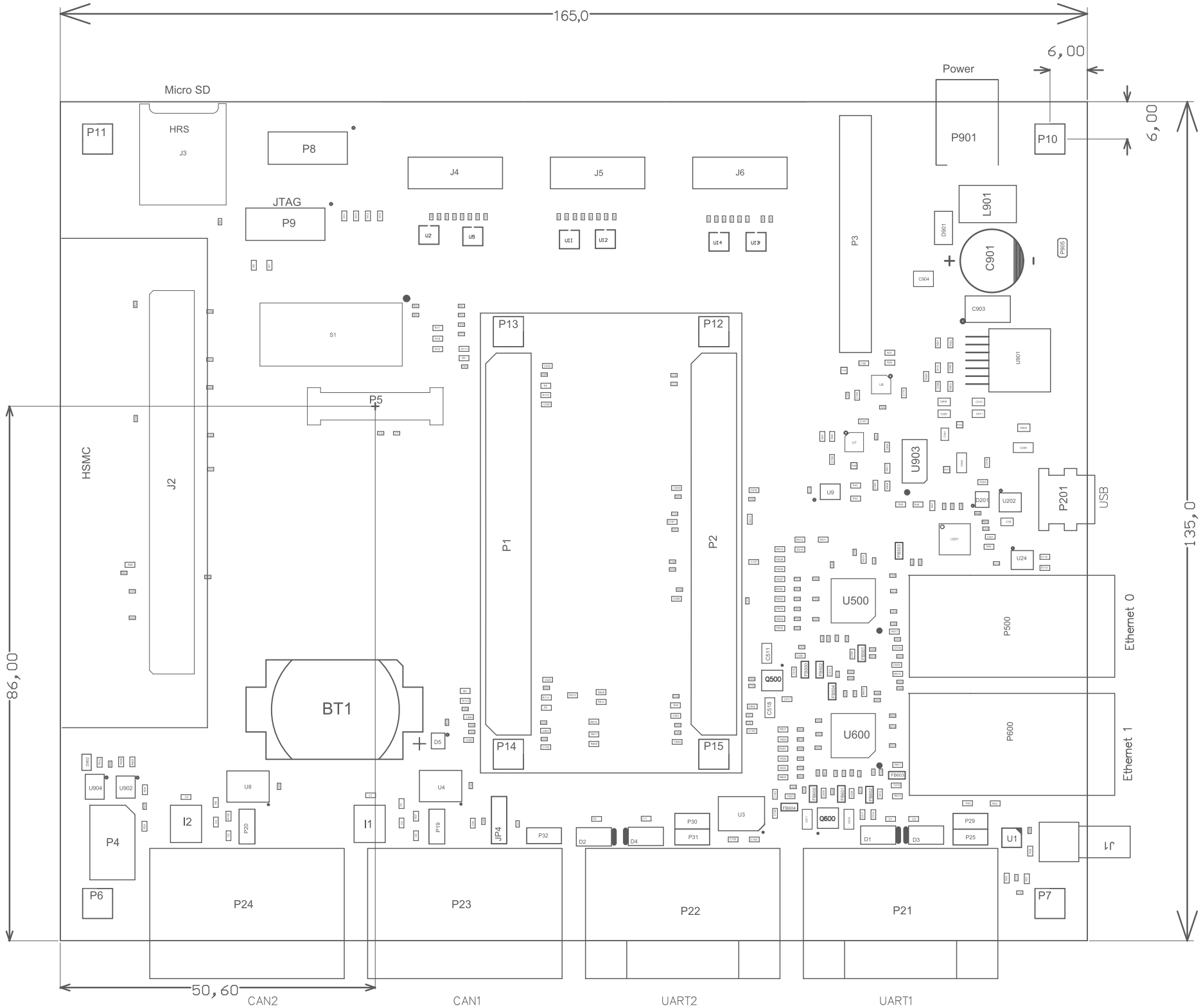
165,0
6,00
6,00
135,0
86,00
50,60
Power
Micro SD
HRS
J3
P11
P8
P9
JTAG
J4
J5
J6
P3
P901
P10
L901
C901
C904
C903
D901
P905
U901
S1
P5
P13
P12
P1
P2
P14
P15
HSMC
J2
U903
U9
D201
U202
P201
USB
U24
U500
P500
Ethernet 0
Q500
C511
C518
U600
P600
Ethernet 1
BT1
D5
U904
U902
P4
P6
I2
U8
P20
I1
U4
P19
JP4
P32
D2
D4
P30
P31
U3
Q600
D1
D3
P29
P25
U1
J1
P7
P24
P23
P22
P21
CAN2
CAN1
UART2
UART1