Fuer diese Unterlagen behalten wir uns alle Rechte vor

Design Hierarchy

Titel	Project Sheet	RefDes
ROOT: Overview	1	
Hierarchy Top Level	1	
Infos	1	
IFACE		
USB, UART	2	11xx
Ethernet 0	3	12xx
Ethernet 1	4	13xx
Audio	5	14xx
LCD	6	15xx
CAN	7	16xx
MEM		
I²C-EEPROM, SPI-Flash, SD-Card	8	21xx
POWER		
5V, 3V3 Buck Converters	9	31xx
Reset & Power buttons, Battery In, PGood detection	10	32xx
CPU/Module Configuartion	11	33xx
CPLD		
CPLD	12	41xx
CONN		
MXM-Connector	13	51xx
JTAG, Pin Headers	14	52xx

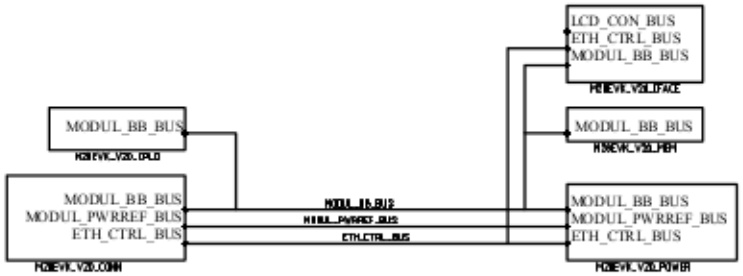

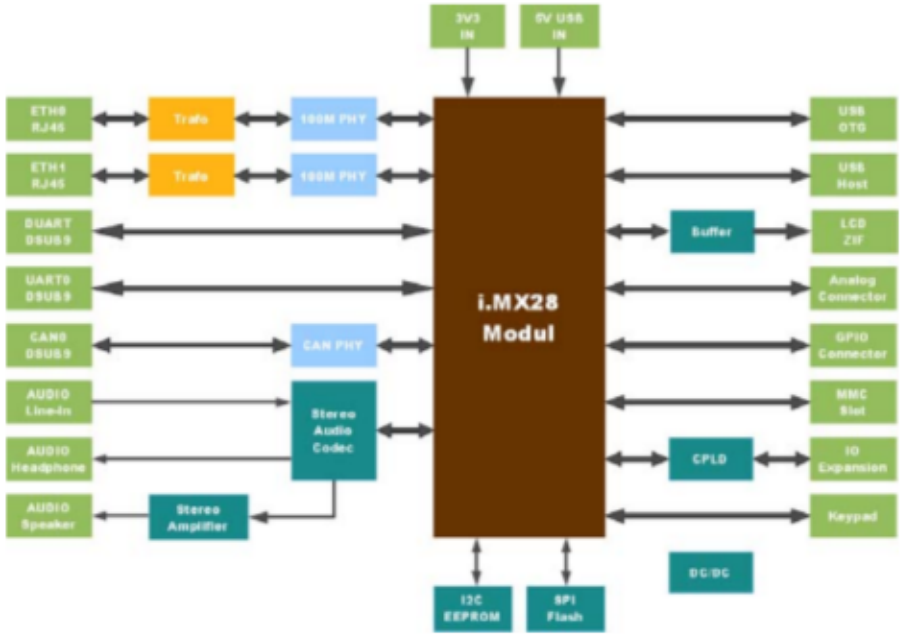

shield ground ring GGND
on edge of board,
connected with GND

Note:
Words in quotation marks, like:
"CAN"
are printed on the
board in silkscreen

○ TP0000 Logo Denx Silkscreen on backside of PCB

○ TP0001
○ TP0002
○ TP0003
○ TP0004

TP0001 - TP0004
free areas for flat round plastic mounting pads
type: ettinger
diameter 13mm

○ TP0010
○ TP0011

TP0007 - TP 0008
Holes for pins that mechanically
hold IMX Module
inner diameter = 3.2 mm
outer diameter= 6 mm
(no copper ring,
just keep free of wires)

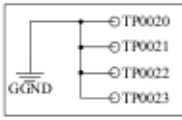

○ TP0020
○ TP0021
○ TP0022
○ TP0023

TP0009 - TP 0012
holes or space for display mounting
inner diameter = 3.2mm,
outer diameter = 6mm
(copper ring GGND)

Modified by	Date	Company

Title: M28EVK_V20

SubTitle: ROOT
Overview

Size	Dwg.No.	Date/Time	Rev
C		13.12.2011 15:25:12	0.0

Drawn by: Stefan Werzinger

Block Sheet 01 of 01

File: F:\M28EVK_V20\Schematic\M28EVK_V20_ROOT.sch

Project Sheet 01 of 14

for this document all rights are reserved

H=440, V=4LA

Fuer diese Unterlagen behalten wir uns alle Rechte vor

User LED

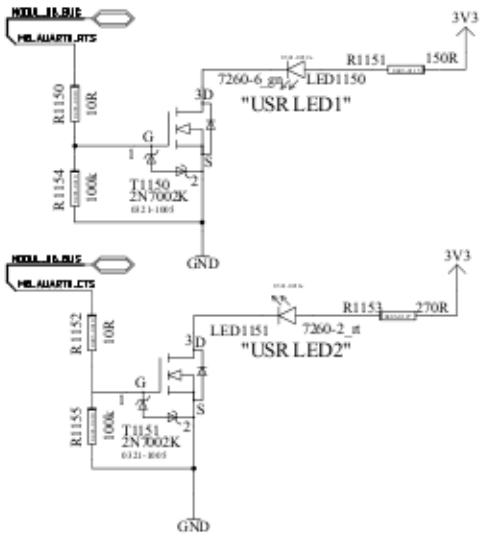

UART

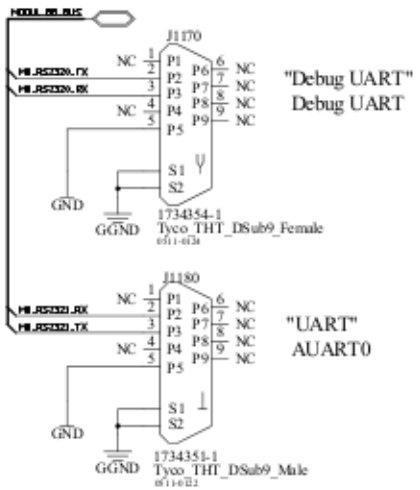

USB

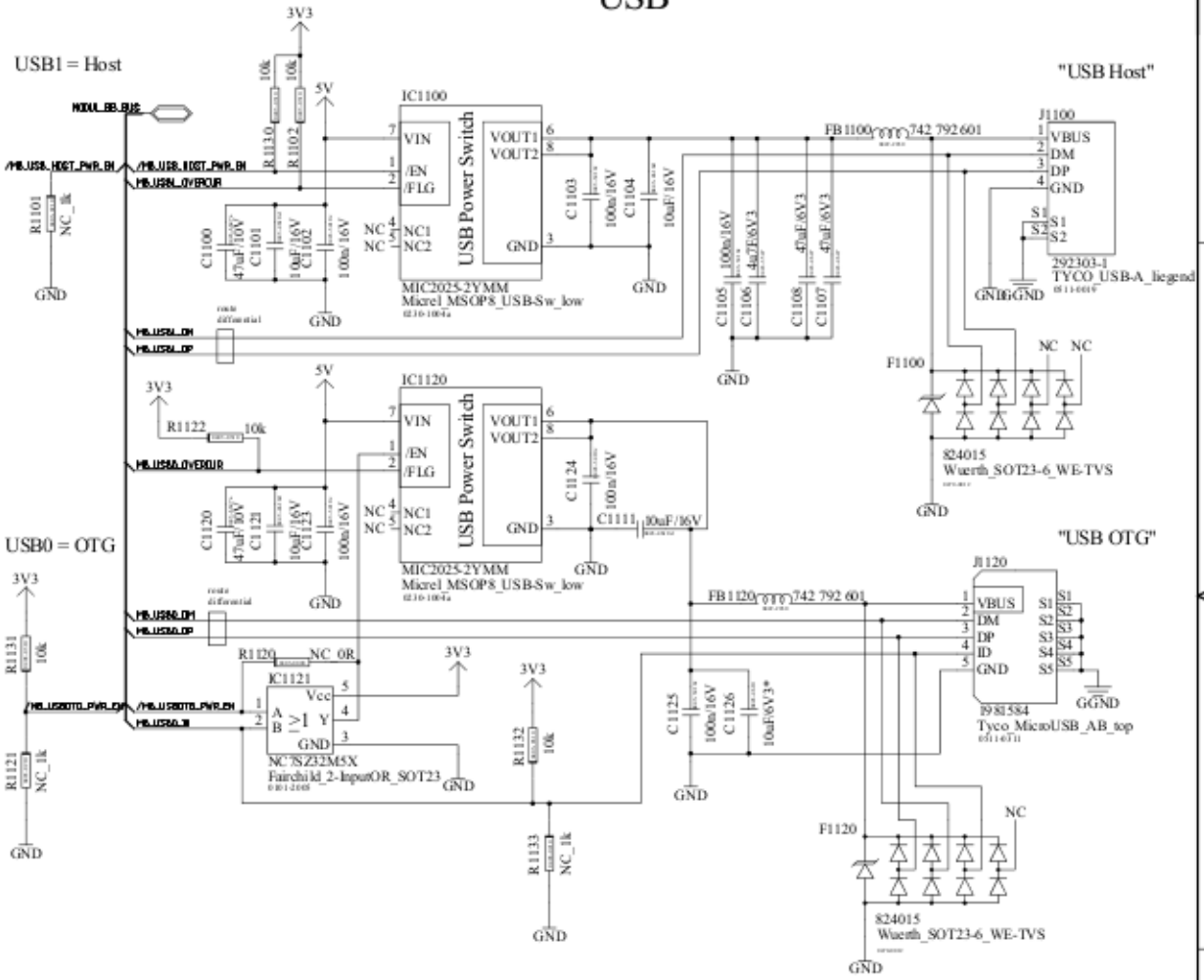

Modified by	Date	Company	Title	M28EVK_V20
			SubTitle	INTERFACE UART-RS232, USB
			Size C	Dwg.No.
			Date/Time	13.12.2011 15:47:46
			Rev	0.0
			Drawn by	Stefan Werzinger
			Block Sheet	01 of 06
			Project Sheet	02 of 14
			File	F:\M28EVK_V20\Schematic\M28EVK_V20_IFACE.sbk

for this document all rights are reserved

H:440 V:440

Fuer diese Unterlagen behalten wir uns alle Rechte vor

Ethernet 0

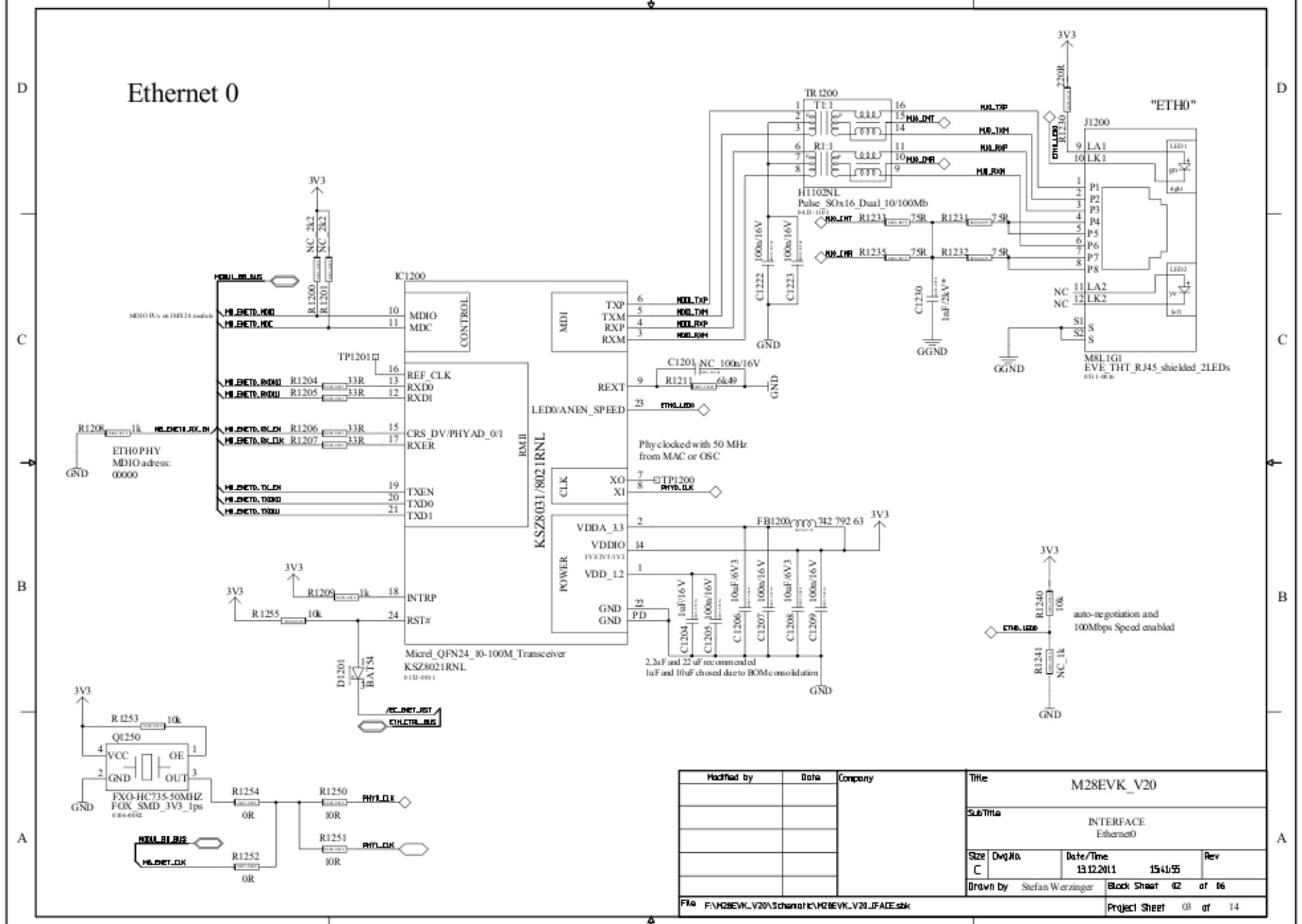

Modified by	Date	Company	Title	M28EVK_V20
			Subtitle	INTERFACE Ethernet0
			Size C	Dwg.No.
			Date/Time	13.12.2011 15:41:55
			Rev	
			Drawn by	Stefan Werzinger
			Block Sheet	02 of 06
			Project Sheet	03 of 14

File F:\M28EVK_V20\Schematic\M28EVK_V20_IFACE.sbk

for this document all rights are reserved

Fuer diese Unterlagen behalten wir uns alle Rechte vor

Ethernet 1

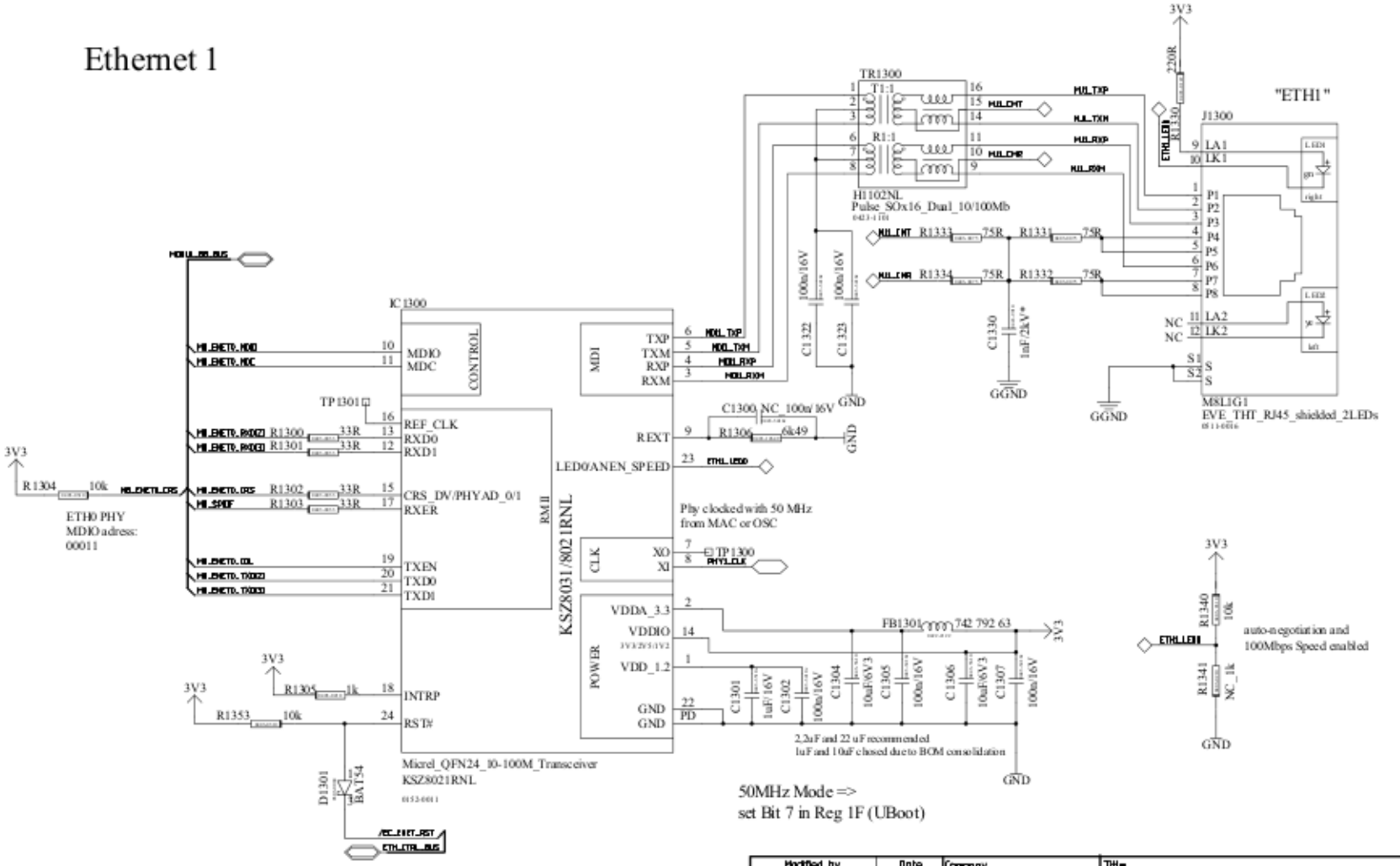

Modified by	Date	Company

Title	M28EVK_V20
SubTitle	INTERFACE Ethernet1
Size C	Dwg.No.
Date/Time	13.12.2011 15:41:55
Rev	
Drawn by	Stefan Werzinger
Block Sheet	03 of 06
Project Sheet	04 of 14
File	F:\M28EVK_V20\Schematic\M28EVK_V20_IFACE.sbk

for this document all rights are reserved

H:440, V:440

Fuer diese Unterlagen behalten wir uns alle Rechte vor

Audio

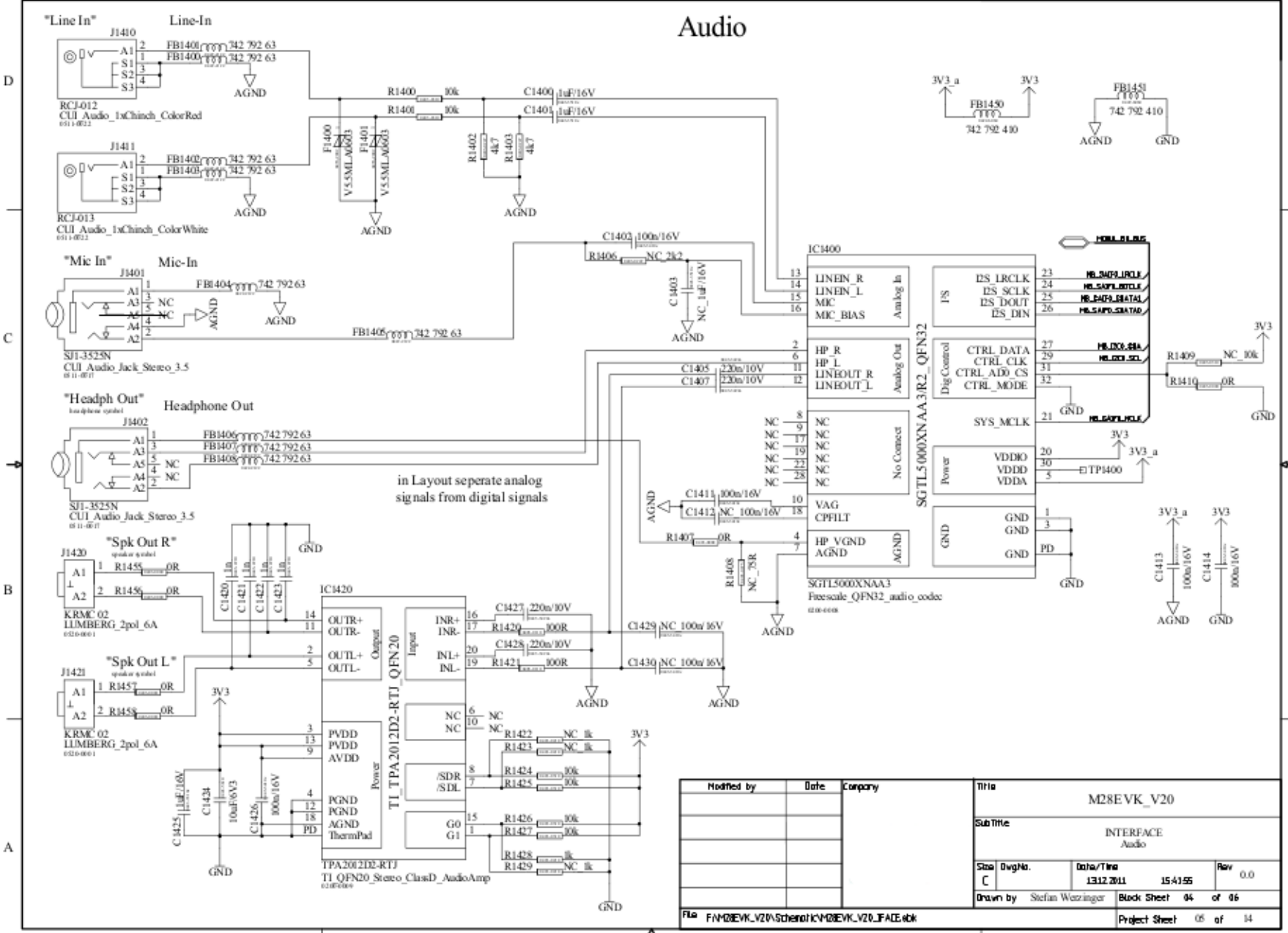

Modified by	Date	Company	Title
			M28EVK_V20
			SubTitle: INTERFACE Audio
			Size C · DwgNo. · Date/Time 13.12.2011 15:41:55 · Rev 0.0
			Drawn by Stefan Wenzinger · Block Sheet 04 of 06
			Project Sheet 05 of 14

File F:\M28EVK_V20\Schematic\M28EVK_V20_IFACE.sbk

for this document all rights are reserved

Fuer diese Unterlagen behalten wir uns alle Rechte vor

LCD

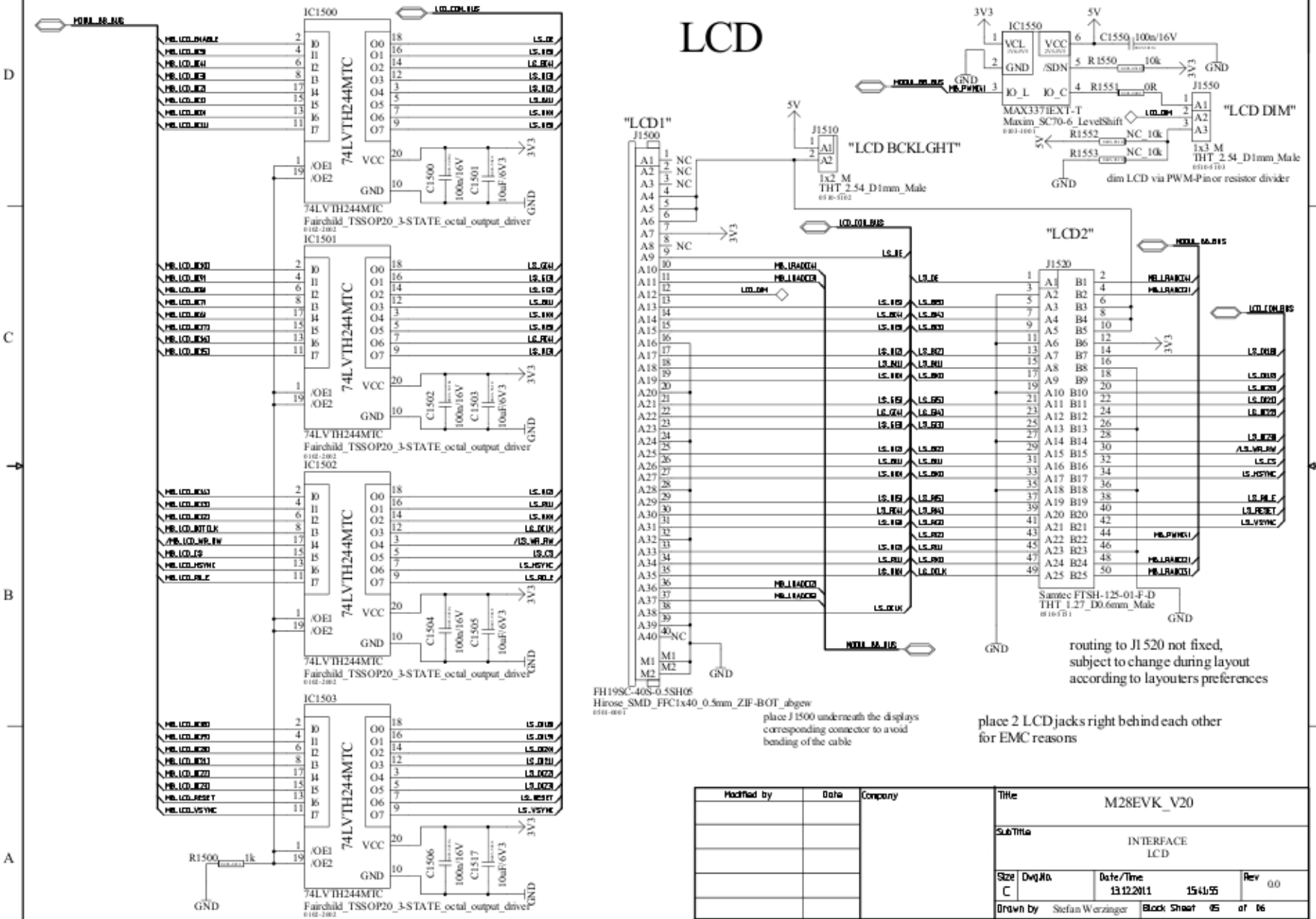

Modified by	Date	Company

Title: M28EVK_V20

Subtitle: INTERFACE LCD

Size: C | Dwg.No. | Date/Time: 13.12.2011 15:41:55 | Rev: 0.0

Drawn by: Stefan Werzinger | Block Sheet 05 of 06

File: F:\M28EVK_V20\Schematic\M28EVK_V20_IFACE.sbk | Project Sheet 06 of 14

for this document all rights are reserved

H=4HO V=4LA

Fuer diese Unterlagen behalten wir uns alle Rechte vor

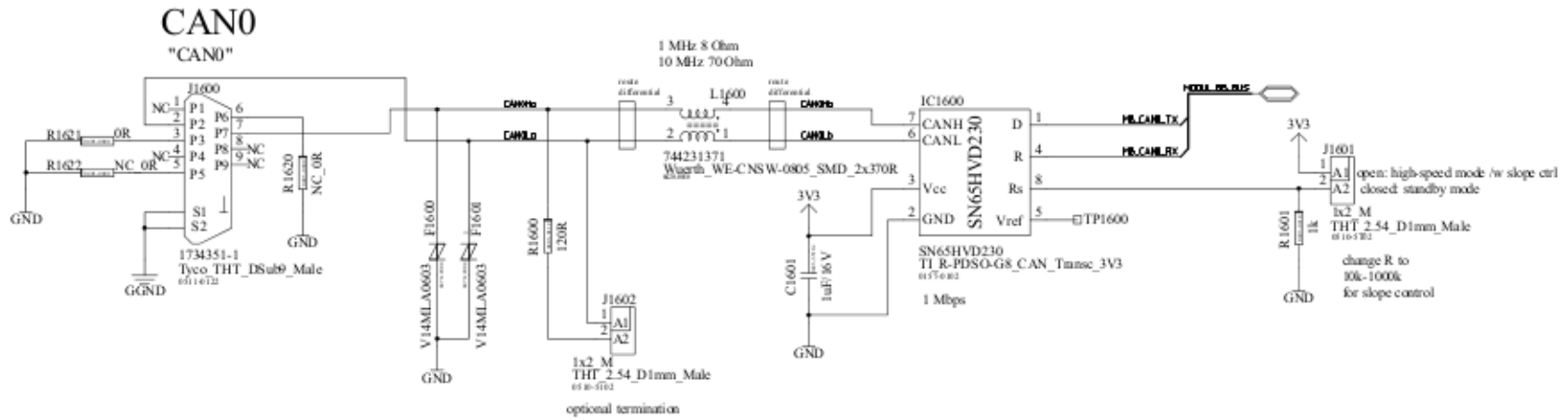

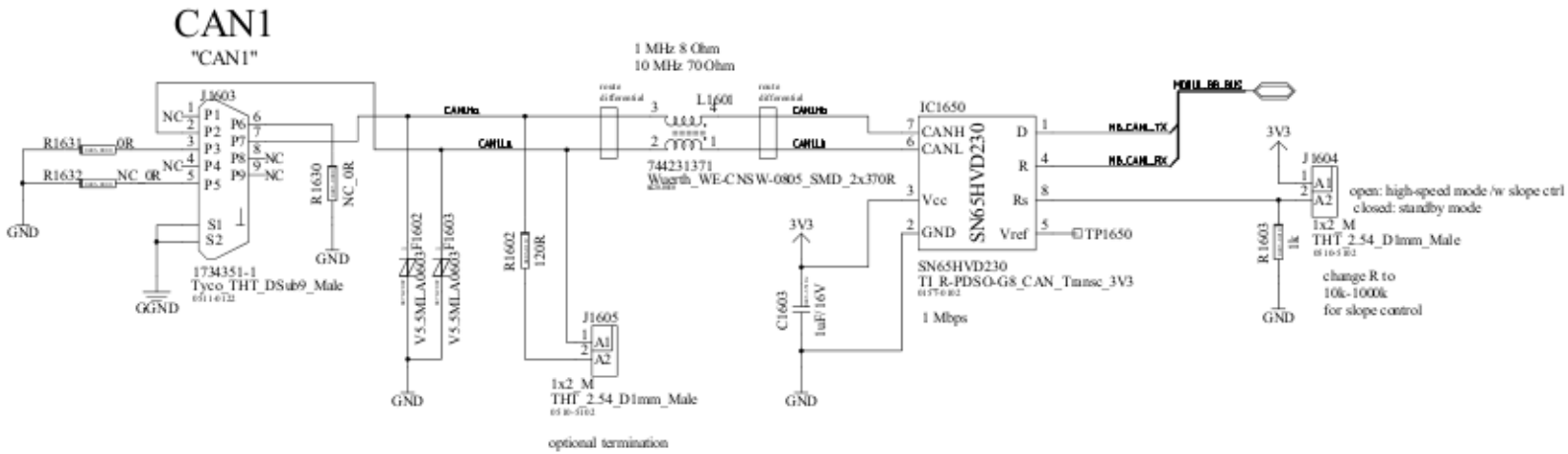

Modified by	Date	Company	Title	M28EVK_V20
			SubTitle	INTERFACE CAN
			Size C	Dwg.No.
			Date/Time 13.12.2011 15:41:55	Rev 0.0
			Drawn by Stefan Werzinger	Block Sheet 06 of 06
File F:\M28EVK_V20\Schematic\M28EVK_V20_IFACE.sbk				Project Sheet 07 of 14

for this document all rights are reserved

H=440, V=4LA

Fuer diese Unterlagen behalten wir uns alle Rechte vor

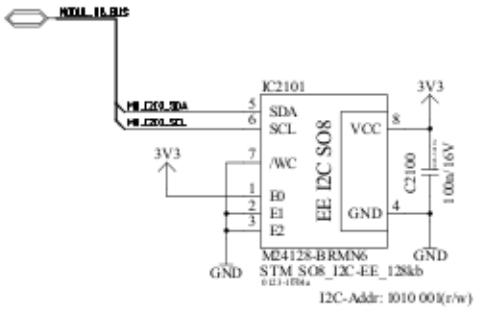

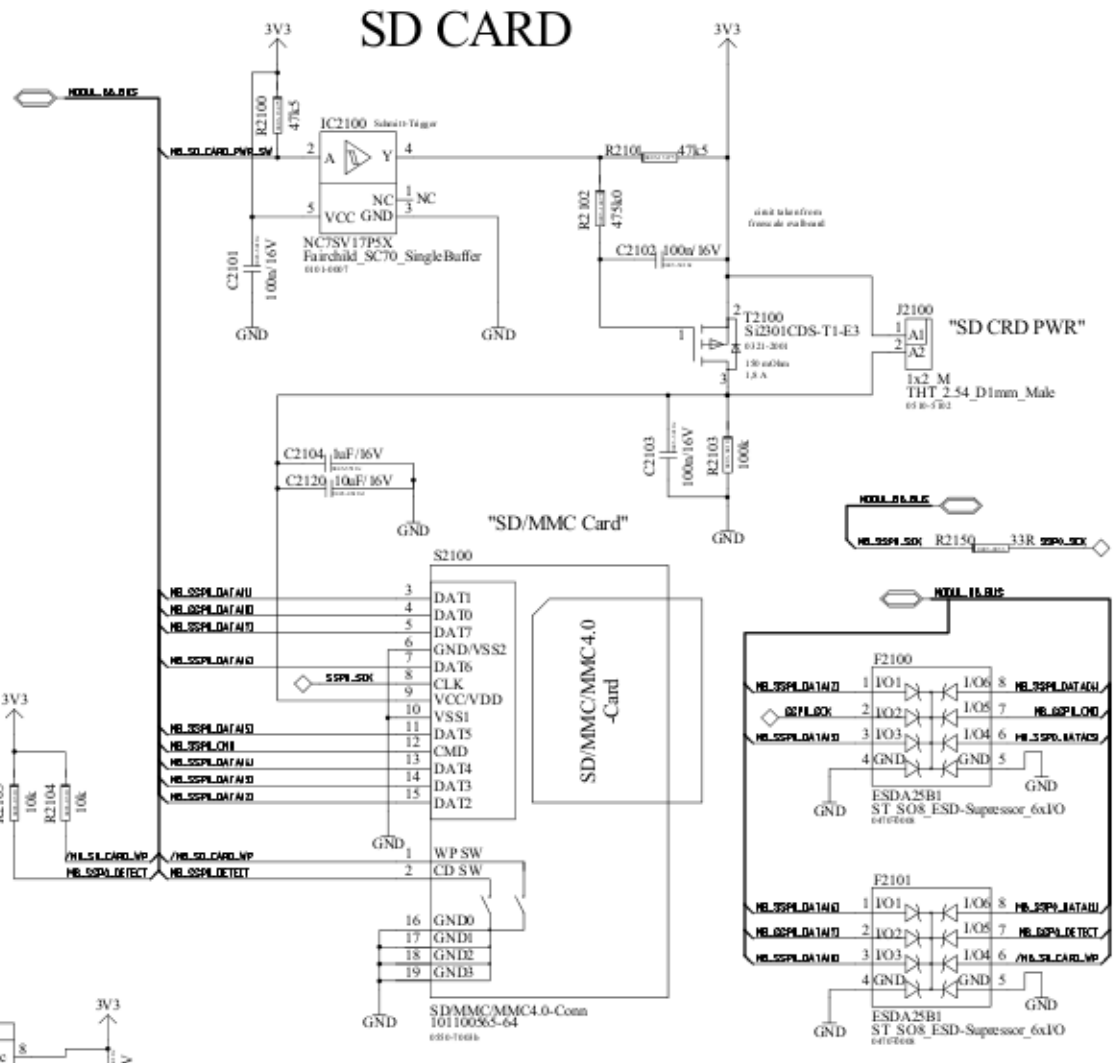

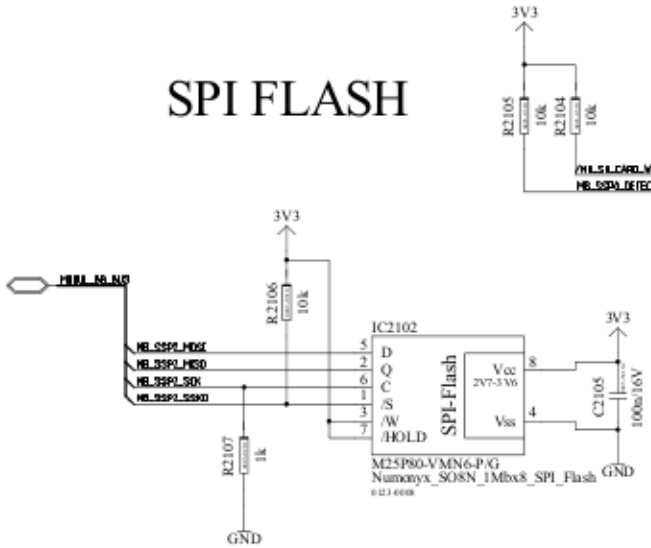

Modified by	Date	Company

Title: M28EVK_V20

Subtitle: MEMORY
SPI-Flash, I²C-EEPROM, SD-Card

Size	Dwg.No.	Date/Time	Rev
C		13.12.2011 15:40:38	0.0

Drawn by: Stefan Werzinger

Block Sheet 01 of 01

Project Sheet 08 of 14

File: F:\M28EVK_V20\Schematic\M28EVK_V20_MEM.sch

for this document all rights are reserved

H:4HD V:4LA

Fuer diese Unterlagen behalten wir uns alle Rechte vor

3V3 Buck Converter

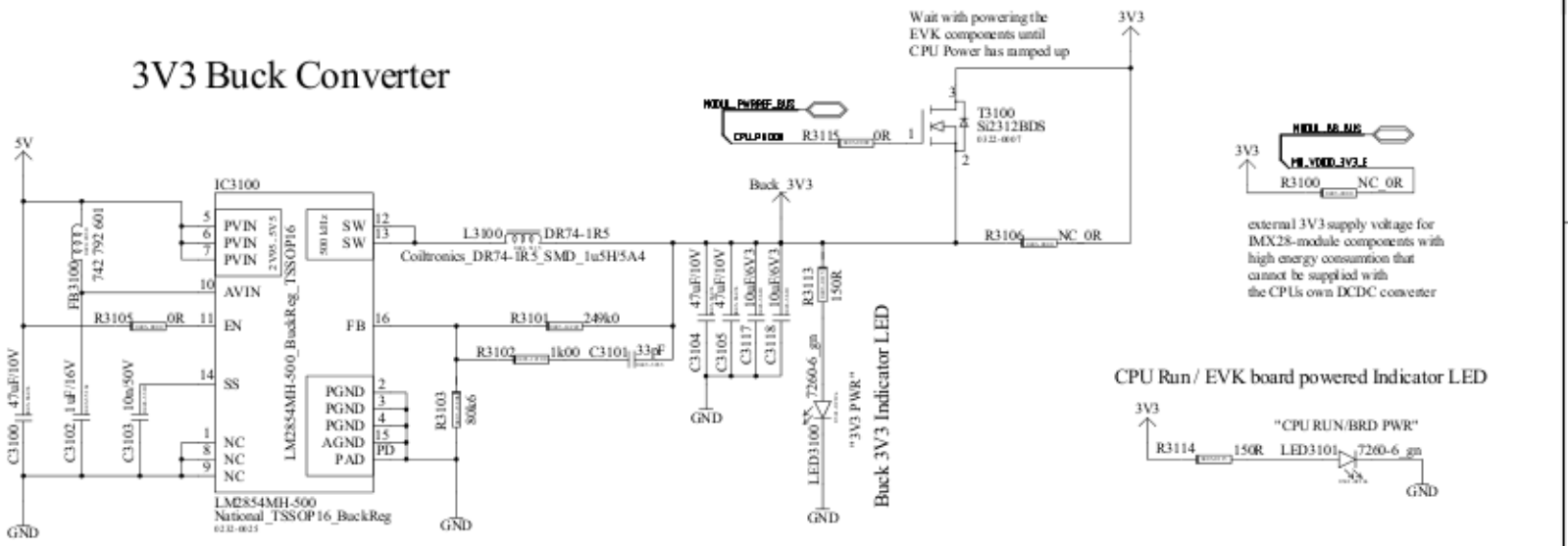

external 3V3 supply voltage for IMX28-module components with high energy consumption that cannot be supplied with the CPUs own DCDC converter

CPU Run / EVK board powered Indicator LED

DC Power In

Maximum input voltage 12VDC

"PWR In"

external DC power supply
HN Power Hnpl 2-090 12W (voelkner.de)
9V/DC; 1330mA
DC-Plug "Hohlstecker":
(Outer-/Inner-Ø in mm) 5,5/2,1
polarity: + Inner

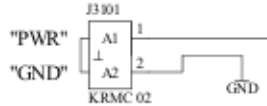

alternate power input:
Lumberg screw terminal

5V Buck Converter

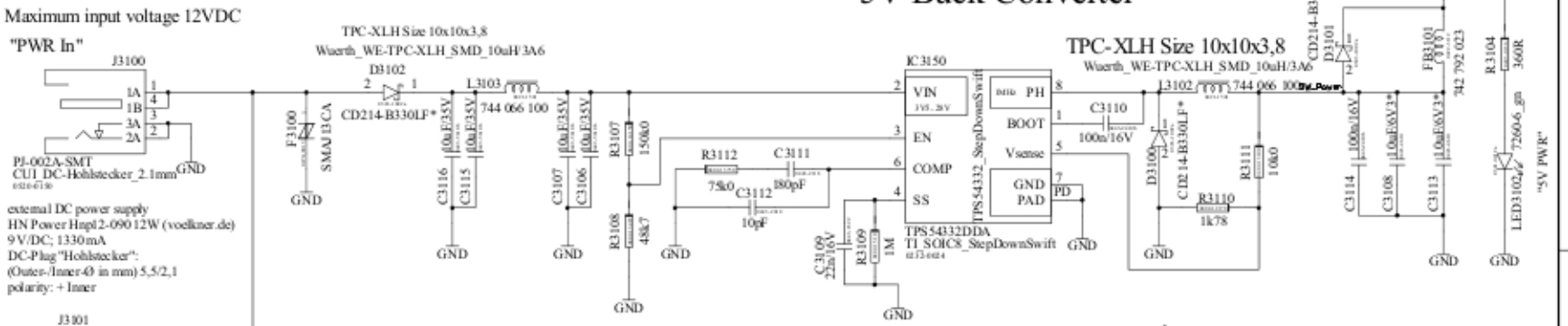

Modified by	Date	Company

Title	M28EVK_V20
SubTitle	POWER 5V, 3V3 Buck Converters
Size C	Dwg.No.
Date/Time	13.12.2011 15:44:46
Rev	0.0
Drawn by	Stefan Werzinger
Block Sheet	01 of 03
Project Sheet	09 of 14
File	F:\M28EVK_V20\Schematic\M28EVK_V20_POWER.sbk

for this document all rights are reserved

H:440, V:440

Fuer diese Unterlagen behalten wir uns alle Rechte vor

Reset and Power buttons

Battery Power In

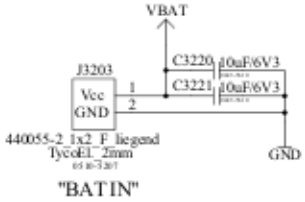

RTC Battery (optional)

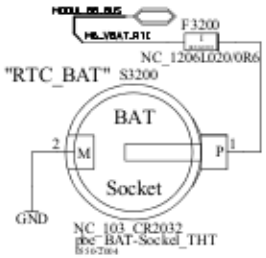

CPU Power Good detection

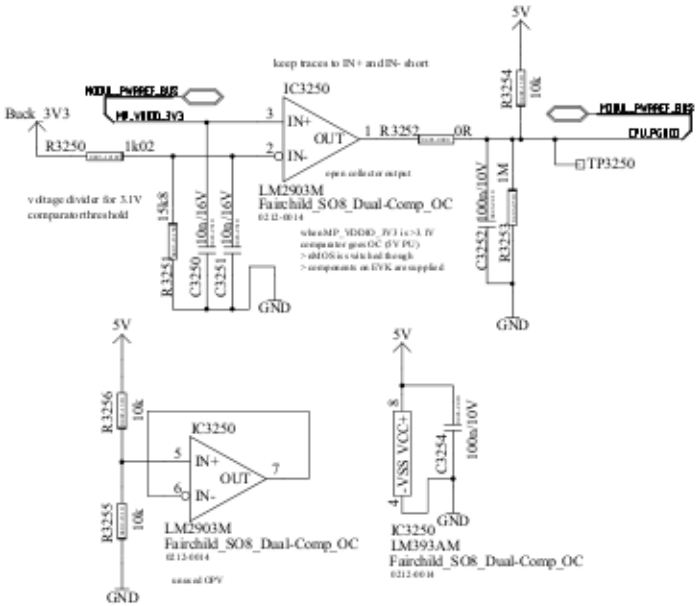

Reset

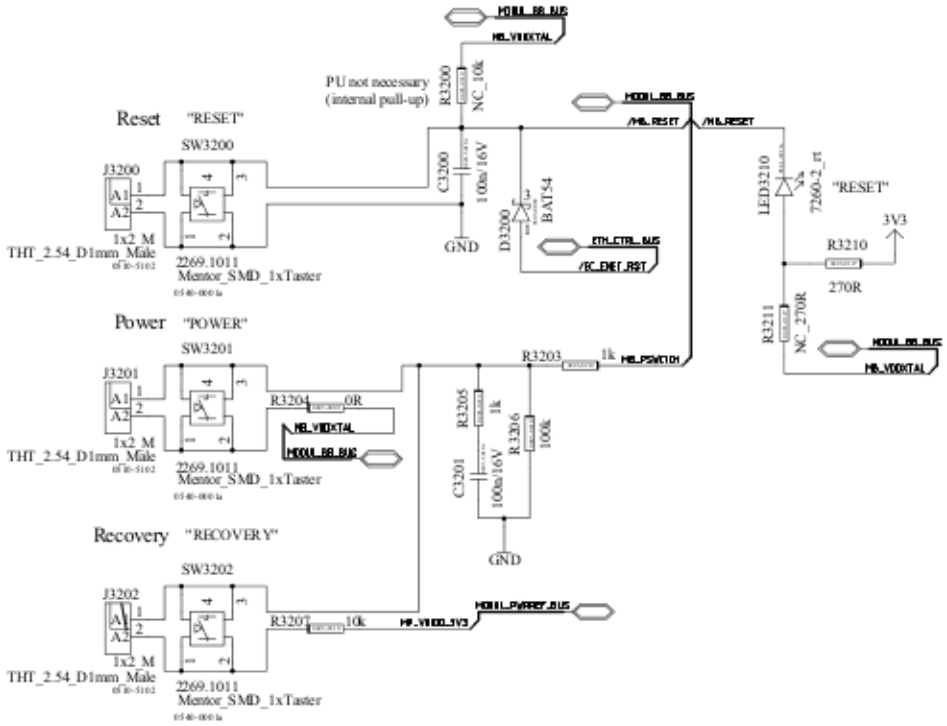

Modified by	Date	Company	Title: M28EVK_V20
			Subtitle: Reset and Power buttons, Battery Power In, PGood detection
			Size C; Dwg.No.; Date/Time 13.12.2011 15:44:46; Rev 0.0
			Drawn by Stefan Werzinger; Block Sheet 02 of 03
File F:\M28EVK_V20\Schematic\M28EVK_V20_POWER.sbk			Project Sheet 10 of 13

for this document all rights are reserved

H:440, V:440

Fuer diese Unterlagen behalten wir uns alle Rechte vor

CPU/Module Configuartion

power supply scenarios

jumper placement for different
module power supply scenarios

scenario \ place jumper	J3132 "5V CPU SPLY"	J3104 "BATT/3V3 CPU SPLY"	J3102 "CRG BATT"
module supplied from 5V	place	no place	place
module supplied from Battery	no place	place Pin 2&3	place
module supplied from 3V3	no place	place Pin 1&2	place
module supplied from 5V, charge Battery	place	place Pin 2&3	place

be careful, wrong placement may result in module damage!

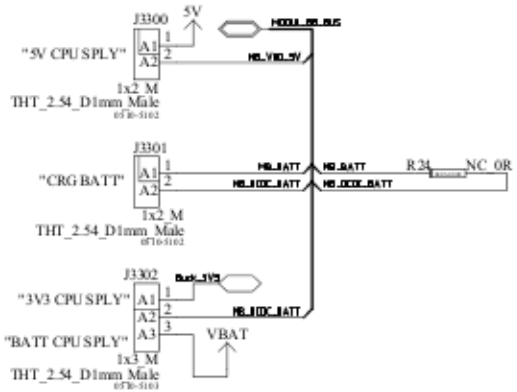

3V3/BATT CPU Supply Indicator LED

DIP Switch: Boot Mode

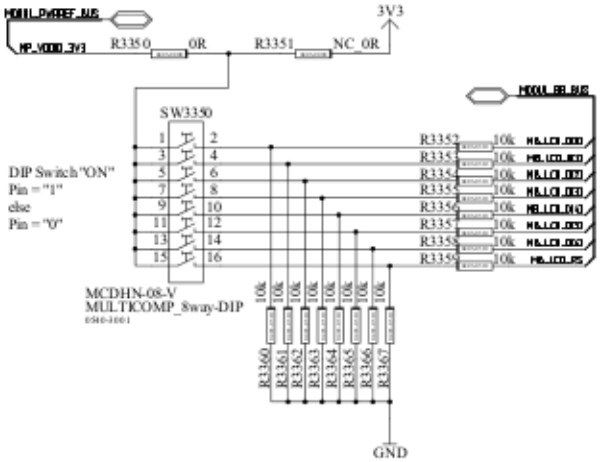

D[0..4]: boot mode
(boot mode selection map see RM pg. 950)
D[5]: ETM enable
D[6]: test mode
RS: boot from resistor (high) or OTP (low)
5V: 5V to module
3V3/BATT: 3V3/BATT to module

Boot from SSP0 SD/MMC:
D[5](msb)..D[0](lsb) = x01001
Boot from JTAG:
D[5](msb)..D[0](lsb) = x00110

Modified by	Date	Company	Title	
			M28EVK_V20	
			SubTitle: CPU/Module Configuartion	
			Size C	Dwg.No. / Date/Time 13.12.2011 15:44:46 / Rev 0.0
			Drawn by Stefan Werzinger	Block Sheet 03 of 03
File F:\M28EVK_V20\Schematic\M28EVK_V20_POWER.sbk				Project Sheet 11 of 14

for this document all rights are reserved

H:440, V:440

Fuer diese Unterlagen behalten wir uns alle Rechte vor

CPLD

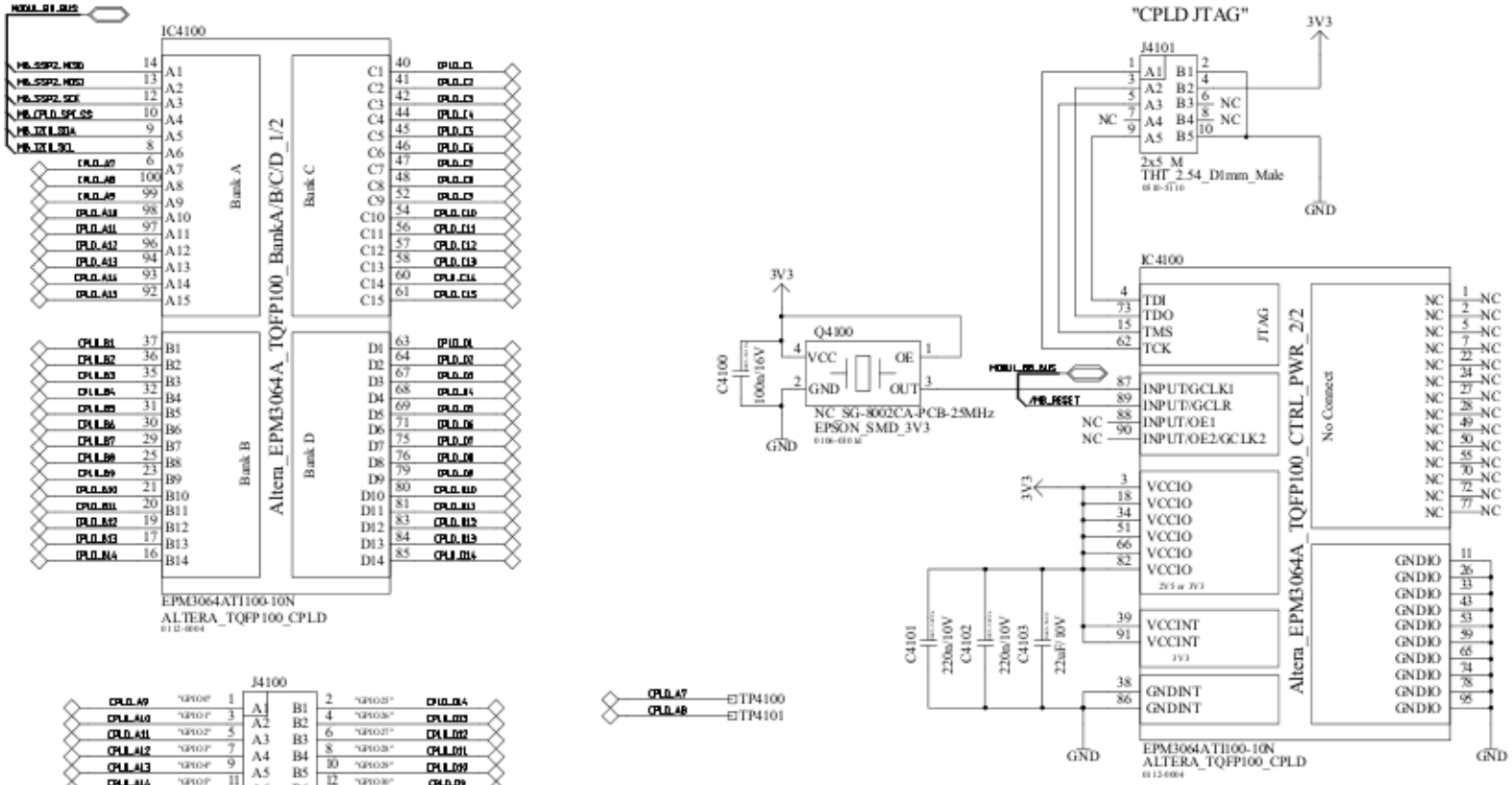

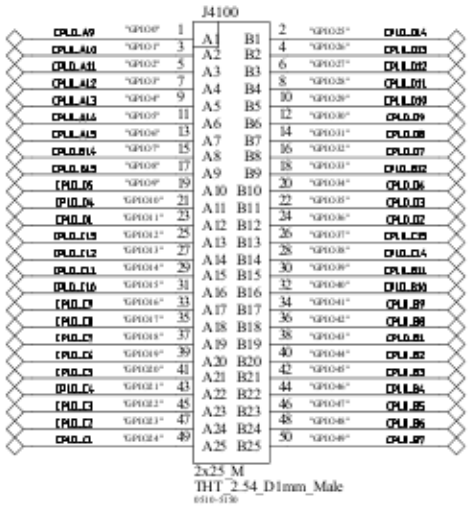

Modified by	Date	Company	Title
			M28EVK_V20
			Subtitle: CPLD + GPIO Pin Header
			Size: C; Dwg.No.; Date/Time: 13.12.2011 15:26:44; Rev: 0.0
			Drawn by: Stefan Wenzinger; Block Sheet 01 of 01
File: F:\M28EVK_V20\Schematic\M28EVK_V20_CPLD.sch			Project Sheet 12 of 14

for this document all rights are reserved

Fuer diese Unterlagen behalten wir uns alle Rechte vor

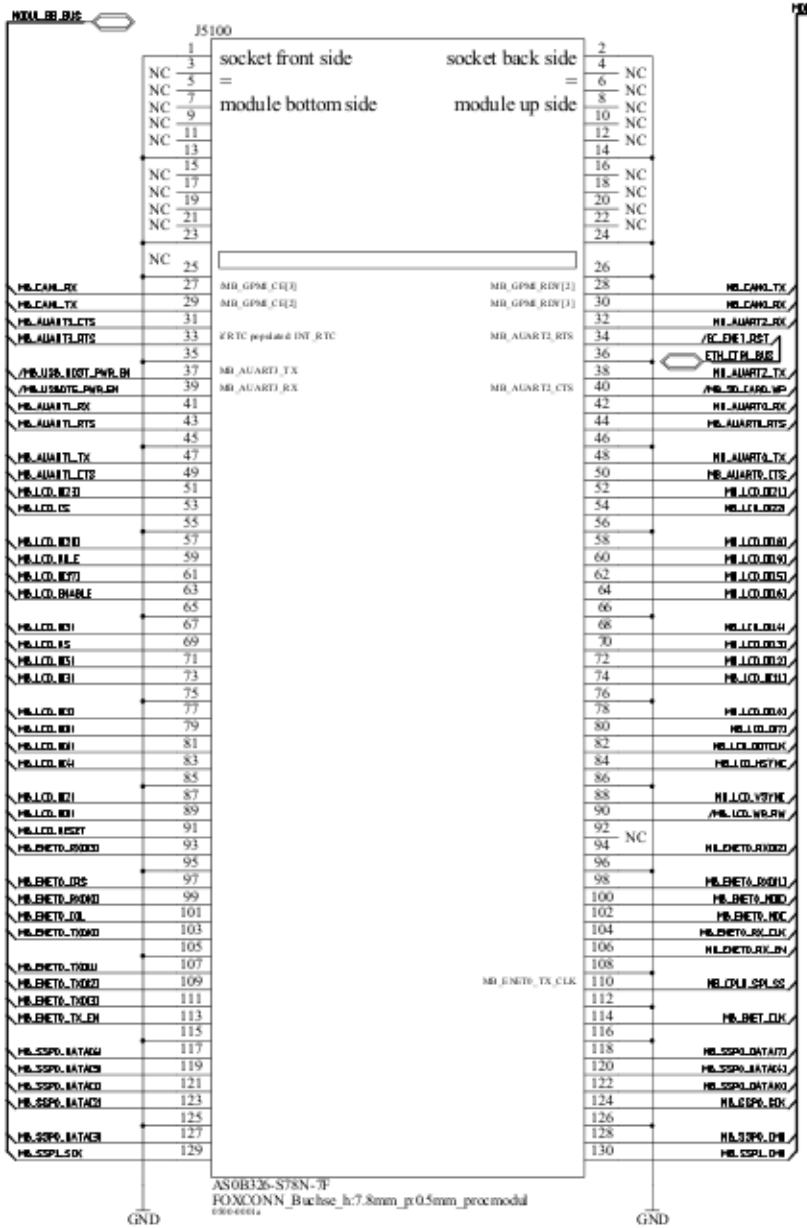

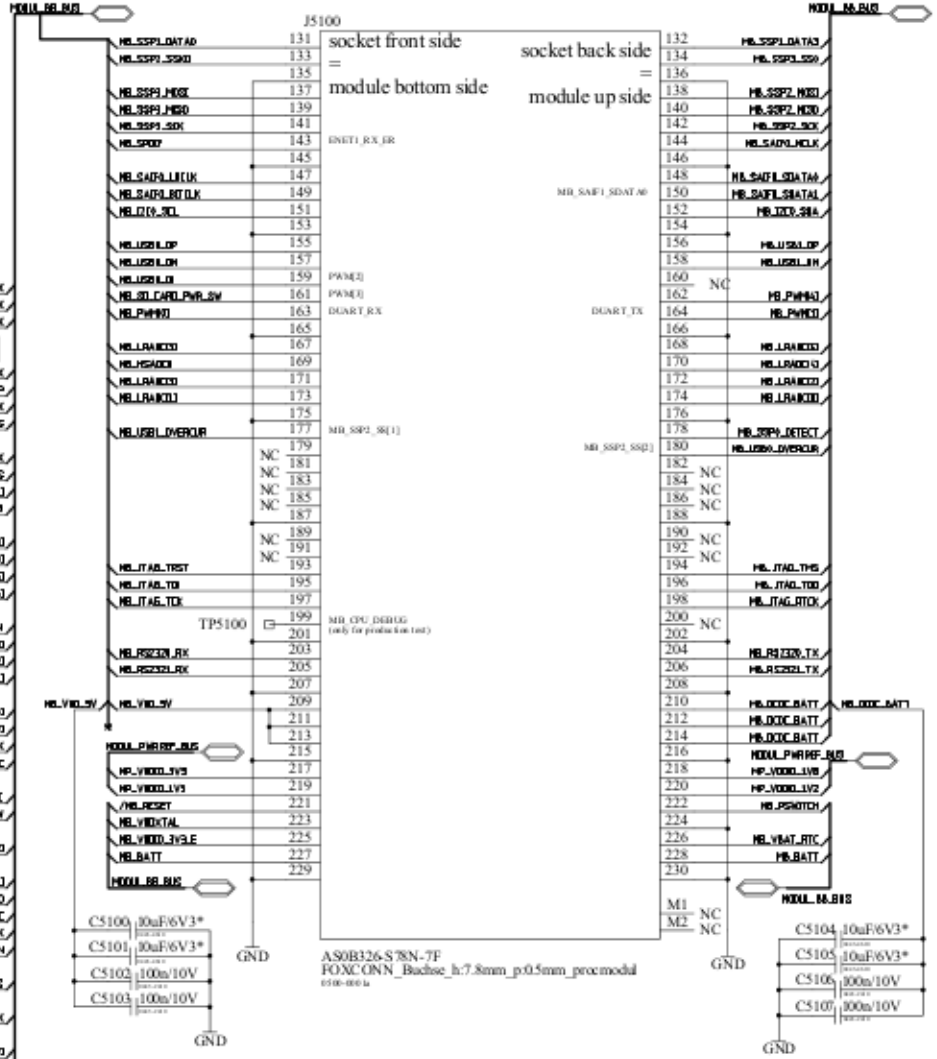

Modified by	Date	Company	Title
			M28EVK_V20
			Subtitle: CONN, MXM card edge connector
			Size: C; Dwg.No.; Date/Time: 13.12.2011 15:44:45; Rev: 0.0
			Drawn by: Stefan Werzinger; Block Sheet 01 of 02
			Project Sheet 13 of 14

File: F:\M28EVK_V20\Schematic\M28EVK_V20_CONN.sdk

for this document all rights are reserved

Fuer diese Unterlagen behalten wir uns alle Rechte vor

CPU JTAG

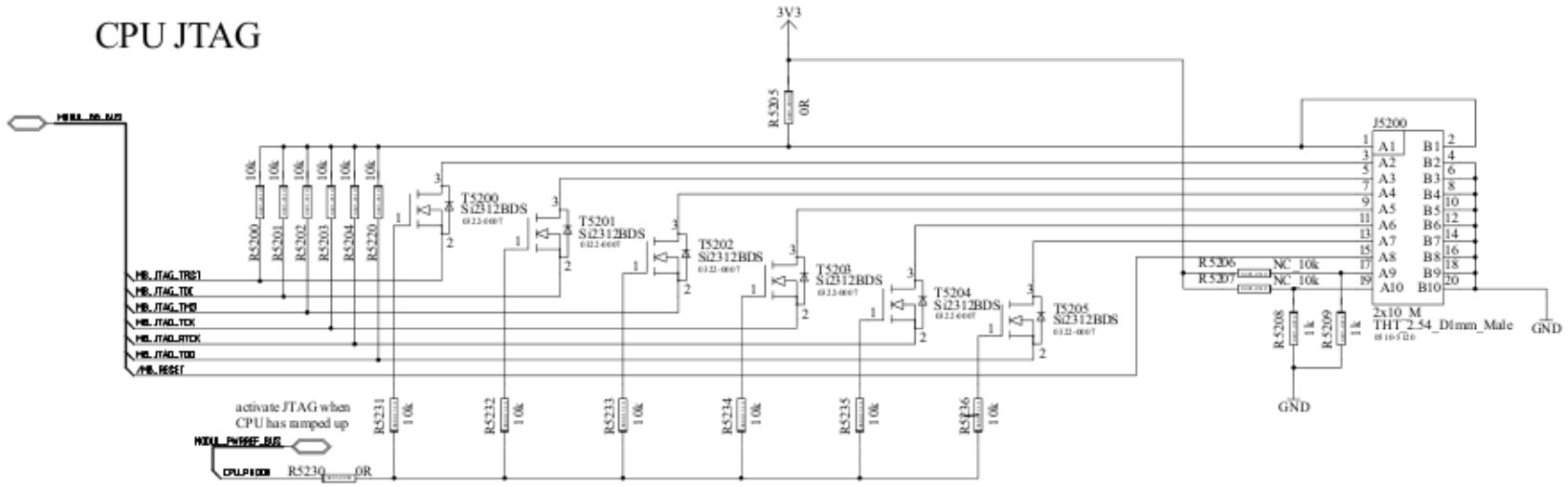

Pin Headers

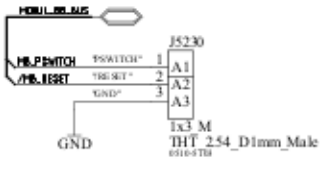

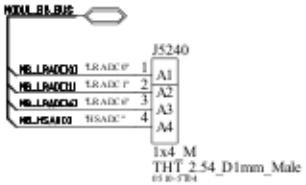

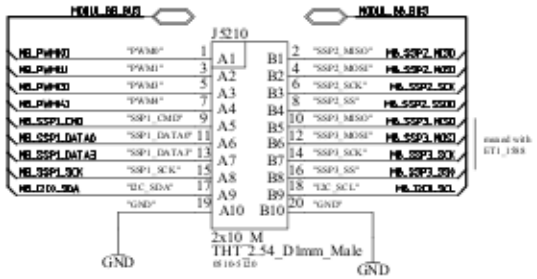

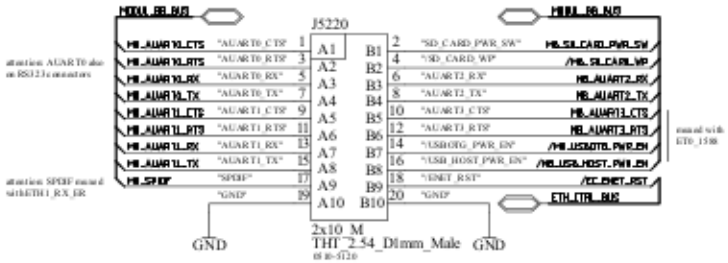

Reference Voltages from CPU's integrated buck converter

Modified by	Date	Company

Title	M28EVK_V20
SubTitle	CONN JTAG, Pin Headers
Size C	Dwg.No.
Date/Time	13.12.2011 15:44:45
Rev	0.0
Drawn by	Stefan Werzinger
Block Sheet	02 of 02
Project Sheet	14 of 14
File	F:\M28EVK_V20\Schematic\M28EVK_V20_CONN.sdk

for this document all rights are reserved

H:4HD, V:4LA